Fundamental RADIO Experiments

ROBERT C. HIGGY

HIGGY · FUNDAMENTAL RADIO EXPERIMENTS

LEY

FUNDAMENTAL RADIO EXPERIMENTS

Robert C. Higgy

ASSISTANT PROFESSOR, DEPARTMENT OF ELECTRICAL ENGINEERING
THE OHIO STATE UNIVERSITY
DIRECTOR OF RADIO BROADCASTING STATION WOSU

NEW YORK
JOHN WILEY & SONS, INC.
CHAPMAN & HALL, LTD.
LONDON

THIS BOOK HAS BEEN MANUFACTURED IN ACCORDANCE WITH THE RECOMMENDATIONS OF THE WAR PRODUCTION BOARD IN THE INTEREST OF THE CONSERVATION OF PAPER AND OTHER IMPORTANT WAR MATERIALS.

COPYRIGHT, 1943
BY
ROBERT C. HIGGY

All Rights Reserved

This book or any part thereof must not be reproduced in any form without the written permission of the publisher.

PRINTED IN THE UNITED STATES OF AMERICA

PREFACE

This laboratory manual describes experiments designed to present the fundamental principles of electricity and radio in a manner that illustrates the application of these principles in radio communication systems. Sufficient theory is indicated to explain the tests to be performed but the book is not intended to be a complete textbook in any sense. Reference to one of the standard textbooks on radio is desirable to supplement the suggested laboratory work.

In most cases a variety of tests on any one subject is indicated so that some choice may be made of work to be performed that will best fit the equipment available. The suggestions regarding equipment presented throughout the experiments and in the appendix should assist in following the indicated tests with a minimum of equipment.

ROBERT C. HIGGY

September, 1943

CONTENTS

		PAGE
INTRODUCTION.	*Use of Measuring Instruments*	1
EXPERIMENT 1.	*Fundamental Relations of Direct-Current Circuit*	7
EXPERIMENT 2.	*The Wheatstone Bridge*	10
EXPERIMENT 3.	*Reactance of Inductances and Condensers*	13
EXPERIMENT 4.	*Series and Parallel Alternating-Current Circuits*	15
EXPERIMENT 5.	*Study of Alternating-Current Waves With the Cathode-Ray Oscilloscope*	18
EXPERIMENT 6.	*Series and Parallel Resonance at Low Frequencies*	22
EXPERIMENT 7.	*Resonance at High Frequency*	25
EXPERIMENT 8.	*Tuned Air-Core Transformers at Radiofrequencies*	27
EXPERIMENT 9.	*Thermionic Emission and the Diode*	29
EXPERIMENT 10.	*Characteristics of a Triode*	31
EXPERIMENT 11.	*Amplification Factor, Plate Resistance and Transconductance of a Triode*	32
EXPERIMENT 12.	*Characteristics of Pentode Vacuum Tubes*	36
EXPERIMENT 13.	*Power-Supply Operation*	37
EXPERIMENT 14.	*Gain and Frequency Response of Audio Amplifier*	41
EXPERIMENT 15.	*Radiofrequency Oscillator*	42
EXPERIMENT 16.	*The Resistance-Capacitance Coupled Audio Amplifier*	45
EXPERIMENT 17.	*Operation of Sweep Circuits*	47
EXPERIMENT 18.	*Telephone Circuits and Wire Telephone Transmission*	49
EXPERIMENT 19.	*Public Address Systems. The Decibel*	53

EXPERIMENT 20. *Class A Vacuum-Tube Amplifier* 55

EXPERIMENT 21. *Class C Amplifier Characteristics* 58

EXPERIMENT 22. *Modulation* 60

EXPERIMENT 23. *Detectors* 65

EXPERIMENT 24. *Radiofrequency Transmission Lines* 68

EXPERIMENT 25. *Analysis and Adjustment of Radio Receiver* 70

EXPERIMENT 26. *High-Frequency Resistance Measurement* 72

EXPERIMENT 27. *Ultra-High-Frequency Transmission Lines* 75

EXPERIMENT 28. *Selectivity and Automatic Volume-Control Characteristics of Radio Receivers* 77

EXPERIMENT 29. *The Communications Type of Radio Receiver* 79

EXPERIMENT 30. *Frequency Measurement* 81

EXPERIMENT 31. *Measurement of Inductance and Capacitance* 82

EXPERIMENT 32. *Vacuum-Tube Voltmeter* 85

APPENDIX. CONSTRUCTION OF LABORATORY APPARATUS 88

Radio Frequency Oscillator 88

Audiofrequency Oscillator 88

Vacuum-Tube Voltmeter 90

100 KC Oscillator, and 10 KC Multivibrator 90

INDEX 93

INTRODUCTION

The worker in any field of radio is called upon to operate, install, or adjust various types of equipment. He is invariably expected to be able not only to handle such equipment expertly but often to predict in advance the results to be obtained under existing or proposed operating conditions. Laboratory work made to simulate actual conditions often provides the opportunity to connect actual working conditions with the many known principles and laws controlling the behavior of circuits.

Laboratory tests require accurate measurements of the various currents, voltages, and frequencies and an intimate knowledge of circuits and the circuit elements, such as resistance, inductance, and capacitance. The use of many types of equipment in the various combinations suggested in the following tests will acquaint the student with many operating conditions.

The proper use of equipment in any laboratory or radio station is exceedingly important. One should first determine the exact measurements needed, then connect the proper type and size instruments. All circuit connections should be carefully checked before the circuit is energized from the power source. Experiment 1 will assist in becoming acquainted with the use of meters to measure current and voltage, but the following precautions are suggested:

1. Always connect the power *after* the circuit has been completely connected and carefully checked. It is a good idea to have someone else check your connections if possible before you throw the power switch.

2. Adjust all circuit elements such as resistors, condensers, or inductances to the safest values consistent with voltage and current flow unless special requirements dictate otherwise. After the circuit is closed and found to be safe the proper adjustments may be made to establish the desired conditions.

3. Know the maximum power, current, or voltage ratings of equipment in use and see that these are not exceeded at any time.

4. Remember that current is measured by an ammeter, milliammeter, or microammeter and that the instrument is in series in the circuit, *never across the power source*. Current-indicating instruments have low resistances and will be damaged if connected across a power source such as a battery or generator.

5. Remember that voltage is measured by a voltmeter or a millivoltmeter connected across some circuit element or the power source.

6. With adjustable meters be certain that the *highest reading* scale is connected first and the sensitivity gradually increased.

7. *High voltages are dangerous.* A small transformer such as that used in a broadcast radio receiver produces lethal voltages. Know your circuit and use insulated knobs and shafts to prevent shock. When adjusting high voltage circuits use *one hand only* and stand in a dry place.

8. Be sure you use the proper *type* of meter to read the right *kind* of current. Meters are plainly marked on the scale as direct-current ammeter, thermoammeter, etc.

9. Handle all equipment carefully to avoid sharp knocks or dropping, which may cause much damage. Radio equipment is expensive.

10. Know what you are doing before proceeding to connect or adjust any circuit. Aimless knob-twisting can be dangerous and can create much damage.

The accuracy of most measurements is determined largely by the accuracy and proper use of meters. Meters of many types must be used to measure currents and voltages of various frequencies if a high degree of accuracy is desired.

The energy used in radio communication circuits may be classified for purposes of measurement according to frequency as follows:

1. Direct currents: Continuous or pulsating, but unidirectional.

2. Low-frequency alternating currents: 20 to 10,000 cycles per second.

3. High-frequency alternating currents: 10,000 to 30,000,000 cycles per second.

4. Ultra-high-frequency alternating currents: Above 30,000,000 cycles per second.

Direct-Current Measurements. Measurements of direct currents and voltages can be made with high accuracy with meters of the moving-coil permanent-magnet D'Arsonval type. These instruments depend upon the reaction between the magnetic field of a permanent magnet enclosed within the meter case and the magnetic field produced by a rotating coil to which a pointer is attached. Portable instruments of this type are commonly used with full-scale readings from 50 microamperes to hundreds of amperes. This type of meter is found to be the most accurate and consistent of any available and is used widely in radio equipment whenever direct current or voltage is to be measured.

This same instrument may be used to read either current or voltage when provided with the necessary shunt or series resistors.

Any particular meter will require a certain definite value of current to cause full-scale deflection. If it is desired to measure higher currents a shunt or parallel resistor is used across the moving coil, the currents passing through the shunt and moving coil being inversely proportional to their resistances. Thus to measure a heavy current, a low-resistance shunt is connected in parallel with the moving coil for the sensitivity required. The shunt resistance may be calculated if the resistance of the coil and current for full-scale deflection are known.

$$R_s = \frac{R_m}{n - 1}$$

where n is the scale multiplication factor desired. That is, if 10 milliamperes is current for full-scale deflection without shunt and 100 milliamperes full-scale deflection is desired, n equals 10. R_m is the resistance of the meter in ohms and R_s is the required shunt resistance in ohms.

A D'Arsonval instrument may also be used to measure voltage in direct-current circuits by connecting a resistor in series with the moving coil to limit the current at the voltage which is being measured. If an instrument has an internal resistance of 50 ohms and requires 1 milliampere for full-scale deflection a resistance of 950 ohms connected in series will require a voltage of $E = 0.001 \times 1000 = 1$ volt for full-scale deflection. Thus any meter of this type can be used as a voltmeter by connecting a suitable series resistor, often called a multiplier, to give the desired full-scale voltage. This may be calculated if the resistance of the meter and current for full-scale deflection is known.

$$R_{\text{series}} = R_{\text{meter}} (n - 1)$$

where R_{series} is series resistor required, R_{meter} is resistance of meter, and n is the scale multiplication factor as above.

It is customary in radio work to use a single D'Arsonval instrument with a group of series resistors and shunt resistors connected as desired with a switch to enable the meter to be used to measure a wide range of voltage and current. With the use of a small battery the same instrument may be used to measure resistance by the voltmeter-ammeter method as described in Experiment 1. Scales are usually calibrated to read volts, milliamperes, and ohms. Fig. 1 shows a diagram of a typical meter of this type usually called a volt-ohm-milliammeter.

Low-Frequency Alternating-Current Measurements. Several types of instruments are used for low-frequency measurements of voltage and current. These include the copper-oxide rectifier, thermocouple,

iron vane, electrodynamometer, and hot-wire types. The first two are most commonly used and will be described here.

The copper-oxide rectifier type uses the D'Arsonval direct-current meter movement with a copper-oxide rectifier to rectify the alternating

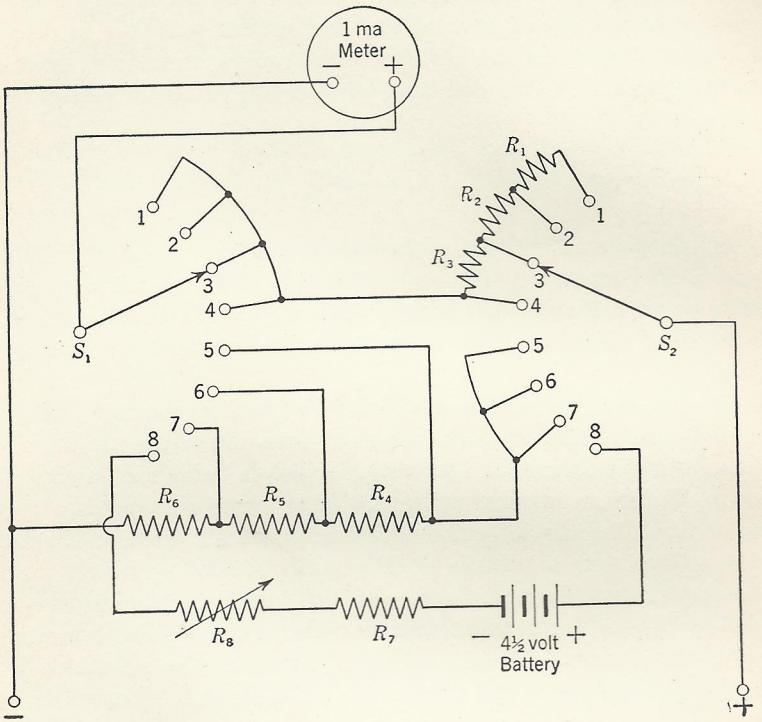

FIG. 1. Direct-current volt-ohm-milliammeter.

S_1 and S_2 are ganged switches and move together. Points 1, 2, and 3 are voltage ranges; 4, 5, 6, and 7 are current ranges. Point 8 connects the meter and battery as an ohmmeter to measure resistance.

current applied. By rectification, current is made to flow in a single direction, thus making a pulsating direct current out of an alternating current. These rectifier units are very small in size and usually are mounted inside the meter case, using four separate rectifier units to secure rectification of both halves of the alternating-current cycle. Fig. 2 shows a typical circuit of such an instrument.

Shunts for any current range, or a series of resistances for desired voltage ranges, may be applied to a copper-oxide rectifier type of meter in the same manner as described above for direct-current instruments. The meter resistance must, however, be determined with

alternating current at the input of the copper-oxide rectifier. Also meter shunts of a size necessary to maintain currents through the rectifier within the linear response range of the rectifier are usually used.

The thermocouple type of instrument, called a thermomilliammeter or thermoammeter, is used only as a current-measuring instrument as it has a comparatively low resistance and would absorb too much power as a voltmeter for normal purposes. This type of meter uses a thermocouple wherein heat from the current passing through a thermojunction causes a direct-current voltage to be developed at the junction which actuates a D'Arsonval moving coil meter movement. Two unlike metals when heated at their junction or point of contact will produce a direct-current voltage, and the junction is called a thermocouple.

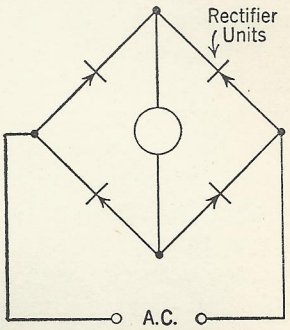

FIG. 2. Copper-oxide rectifier-meter connections.

The thermocouple type of instrument is reliable and dependable under ordinary conditions. Its calibration, however, varies with temperature, and the heater unit will usually stand only small overloads as compared with other instruments.

Thermoammeter instruments may be calibrated by comparing them with direct-current instruments of known accuracy. Current should be applied in both directions and the average of the two readings used in plotting a calibration curve. The copper-oxide rectifier type of meter must be calibrated by comparison with an accurate alternating-current meter on alternating current. Such instruments frequently are equipped with a switch to disconnect the rectifier so that the same meter may be used to indicate direct currents or voltages. Separate scales for direct current and alternating current must be used.

The reader is referred to other standard texts for a description of other seldom-used types of low-frequency meters.[1]

High-Frequency Alternating-Current Measurements. The thermocouple ammeter or milliammeter is the only reliable current-indicating instrument that may be used on high frequencies. As its operation depends upon the heating effect only, its reading is largely independent of frequency and is an accurate measure of the current. The thermocouple may be calibrated on direct current or low-frequency alternating current as mentioned above. Thermoammeters are very useful

[1] Henney, *Principles of Radio*, John Wiley & Sons, New York. Rider, *Vacuum Tube Voltmeter*, Rider Publishing Co., New York.

in high-frequency circuits such as antenna or tank circuits; the internal resistance of the meter is low and is usually stated on the meter face if appreciable, so its effect may be noted. Accuracy over a very wide frequency range and ease of calibration make them valuable instruments in radio circuits.

Voltage measurements at high frequencies may be made by determining the current through a known noninductive resistance with a thermoammeter, thus obtaining a known high-frequency voltage which may be compared with an unknown voltage. Such a comparison would require some power and could lead to considerable error.

Ultra-High-Frequency Measurements. Measurements at frequencies higher than 30 megacycles (30,000 kilocycles) may be made with reasonable accuracy with thermoammeters made for use at these frequencies. Manufacturers supply correction curves permitting corrections to be made with such instruments for measurements up to 300 megacycles. Meters used for frequencies above 30 megacycles should be of a type having low terminal reactance and resistance to insure that the current being measured passes through the heater unit. The crystal detector type of rectifier used with a direct-current microammeter is finding important application at ultra-high frequency, making possible measurements up to 3000 megacycles. The crystal rectifier is simply connected in series with the direct-current meter. The calibration is not permanent, and only small currents and voltages may be measured.

Vacuum-Tube Voltmeters. Vacuum-tube voltmeters are coming into wide use, particularly in high- and ultra-high-frequency measurement work. They may also be used for direct-current voltage measurement provided that blocking condensers are short-circuited in the input circuits and proper polarity is observed. The slide-back type is most suitable where measurements between extreme values of voltage are to be made, calibration involving only the determination of direct-current balancing voltages. Experiment 32 explains the principle of operation.[1]

Operation of this type of meter requires practically no power from the circuit being measured, and thus the meter is capable of registering exact voltages in low-energy or high-resistance circuits. Considerable error would result in measurements in such circuits if the voltmeter required a considerable current to operate.

Simple types of vacuum-tube voltmeters easily constructed for laboratory use are valuable instruments in carrying out many experiments herein described.

[1] Henney, *Principles of Radio*, John Wiley & Sons, New York. Rider, *Vacuum Tube Voltmeter*, Rider Publishing Company, New York.

EXPERIMENT 1

FUNDAMENTAL RELATIONS OF DIRECT-CURRENT CIRCUIT

The relationship between current, voltage, and resistance of any direct-current circuit rigidly follows definite laws. Knowledge of these fundamental laws and their proper application permits the determination of circuit conditions by calculation or measurement with absolute accuracy.

Ohm's law stated for direct-current circuits relates current (in amperes), voltage (in volts), and resistance (in ohms). It says, "The voltage drop in *any part* of a circuit is equal to the resistance of that part multiplied by the current through *that part*." In symbols:

$$E = IR \qquad I = \frac{E}{R} \qquad R = \frac{E}{I}$$

Ohm's law may be applied to an entire circuit or to a part of a circuit, care being taken to consider only the voltages, currents, and resistance in the same part of the circuit. Mistakes are frequently made in determining the voltage across a resistance by multiplying the resistance by the current in some other part of the circuit. The correct voltage is obtained only by multiplying the resistance by the total current through it.

Kirchhoff's laws make possible the solution of many circuit problems.

1. As much current flows away from any point in a circuit as flows to that point.

2. The algebraic sum of the IR voltage drops around any one path of an electric circuit equals the algebraic sum of the voltage applied on that same path.

Joule's law expresses the *power* in a direct-current circuit as a function of voltage, current, and resistance. It says, "The power in watts expended in any part of a circuit equals the voltage drop through that part multiplied by the current through that part."

$$\text{Power (in watts)} = \text{Volts} \times \text{Amperes}$$

or in the usual symbols

$$P = E \times I$$

This equation is correct whether the circuit does or does not contain applied voltages, such as those due to batteries or generators. Again, either part of the circuit or all of it may be considered as long as only the corresponding current and voltage are considered.

From Ohm's law we can derive other statements of Joule's law that

are more convenient. Since $E = IR$, $P = I^2R$; or since $I = E/R$ we can say that $P = E^2/R$.

The above laws are very important in understanding the relationships existing in direct-current circuits, and the student will do well to familiarize himself with them so that they may be used without hesitation. They are the A B C's of the electric circuit.

Parallel Resistances. When two or more circuit elements are connected to the same voltage source they are said to be connected in parallel, the voltage applied to all of the parallel-connected elements being the same. From Ohm's law we can derive an expression to determine the combined resistance of two or more resistances connected in parallel.

$$I_1 = \frac{E}{R_1} \qquad I_2 = \frac{E}{R_2} \qquad I_3 = \frac{E}{R_3}$$

$$I_{\text{total}} = I_1 + I_2 + I_3$$

or

$$I_{\text{total}} = \frac{E}{R_1} + \frac{E}{R_2} + \frac{E}{R_3}$$

and as

$$R_{\text{combined}} = \frac{E}{I_{\text{total}}}$$

$$R_{\text{combined}} = \frac{E}{\frac{E}{R_1} + \frac{E}{R_2} + \frac{E}{R_3}} = \frac{E}{E\left(\frac{1}{R_1} + \frac{1}{R_2} + \frac{1}{R_3}\right)} = \frac{1}{\frac{1}{R_1} + \frac{1}{R_2} + \frac{1}{R_3}}$$

Experimental Procedure

1. Study of voltage and current in a series and parallel circuit, using circuit of Fig. 1–1.

Remove the jumper between terminals 1 and 2, and connect a suitable ammeter to measure the current. Close the switch and read. Replace jumper between 1 and 2, and similarly insert the ammeter between points 3 and 4.

2. In like manner measure the currents between points 6–7, 11–12, and 8–9.

3. With the circuit complete as shown, use a voltmeter and measure the voltage drops across R_1, R_2, and R_3 separately. Also measure the voltage across the battery at terminals 1–9 with S closed.

From the above measurements determine which law applies to each

measurement, check your measurements with the law, and make a statement as to currents and voltage drops in series and parallel circuits. Calculate a value of resistance that would be equivalent to

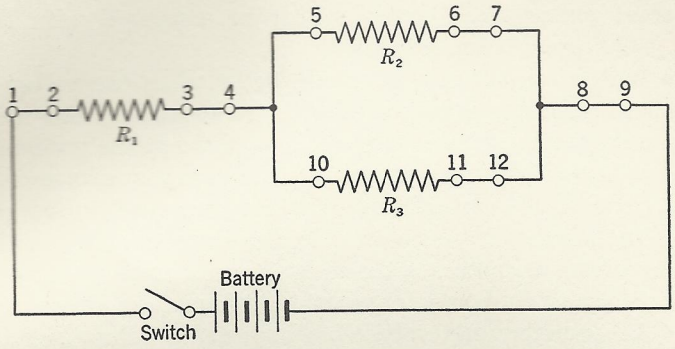

FIG. 1–1. Series and parallel circuit.

R_2 and R_3 connected in parallel, and determine the current that would flow through this resistance if connected in the circuit shown in Fig. 1–1 in place of R_2 and R_3. Compare this current with the sum of the currents through R_2 and R_3 and the current through R_1.

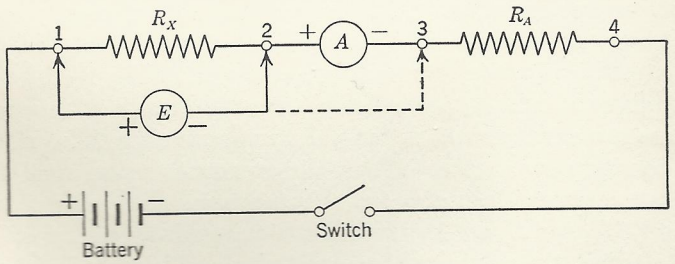

FIG. 1–2. Resistance measurement by voltmeter-ammeter method.

4. Measurement of resistance by voltmeter-ammeter method. In Fig. 1–2, R_x is an unknown resistance to be measured. R_A is a protective resistance to limit the current in the circuit to a value that will not damage the ammeter A if R_x is very small.

Determine by Ohm's law the resistance of various unknown resistors, R_x, by reading the current through them on ammeter A and by reading the voltage drop across terminals 1–2 with a voltmeter E.

5. Similarly determine the resistance of parallel combinations of two or three of the resistors measured in part 1 by connecting them in

parallel across terminals 1–2. Compare measured values with computed values.

6. Repeat part 1, using a different voltmeter to measure the voltage drop across terminals 1–2. Use a voltmeter having a different value of internal resistance. Discuss results as compared with those of part 1. (See explanation below.)

Note that a considerable error will occur when the voltmeter has low internal resistance as compared with the resistance being measured. This is because considerable current flows through the voltmeter. In such cases it would be more accurate to measure the voltage drop from points 1 to 3, as the current through the voltmeter then will not pass through the ammeter. Some error is also introduced by the internal resistance of the ammeter, as the resistance measured would equal the unknown R_x plus the ammeter resistance, since they are connected in series. As ammeters and voltmeters have finite values of resistance, this voltmeter-ammeter method has limited accuracy.

Experiment 2

THE WHEATSTONE BRIDGE

The Wheatstone bridge method of resistance measurement is frequently used where a high degree of accuracy is desired or where the voltmeter-ammeter method of Experiment 1 is not sufficiently accurate. The Wheatstone bridge consists of a circuit of four resistances, one of which is the unknown to be measured, as shown in Fig. 2–1.

Resistances R_1 and R_2 are called the "ratio arms," R_3 is a variable resistance standard, and R_x is the unknown resistance to be measured. G is a sensitive zero center pointer direct-current meter used to indicate small currents often of a few microamperes and called a "galvanometer." K_1 and K_2 are key switches of the push-button type. R_s is a shunt to adjust the galvanometer sensitivity and is sometimes variable in steps.

Various arrangements of K_1, K_2, and the galvanometer shunt are used in complete Wheatstone bridge instruments. Often a double key is used which combines the operations of K_1 (the battery key) and K_2 (the galvanometer circuit) in such a manner that K_1 closes before K_2. The galvanometer shunt is usually opened by a second key, K_G, to provide maximum galvanometer sensitivity. This key is pressed after it has been determined that the current is not too high. In operation it is important that the battery circuit be completed before the galvanometer circuit and that the galvanometer circuit be opened before the battery circuit is opened.

When a measurement is to be made, the bridge is *balanced* by adjusting the ratio arm resistances R_1 and R_2 and the variable resistance standard R_3 until, with the two key switches closed, no current is indicated in the galvanometer circuit. This means that points 2 and 3 are at the same voltage. Under this condition the current I_1 through R_1 all flows through R_x and the current I_2 through R_2 all flows through R_3.

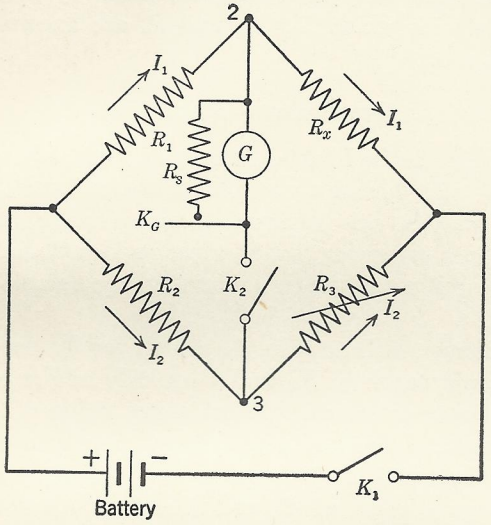

FIG. 2–1. Wheatstone bridge for resistance measurement.

As points 2 and 3 are at the same potential, the voltage drop across R_1 must equal that across R_2. Currents I_1 and I_2 are not necessarily equal, as R_1 may not equal R_2, the voltage drop being equal to current times resistance.

At balance then

$$R_1 I_1 = R_2 I_2 \tag{1}$$

$$R_x I_1 = R_3 I_2 \tag{2}$$

Dividing Eq. 2 by Eq. 1 gives

$$\frac{R_x}{R_1} = \frac{R_3}{R_2} \quad \text{or} \tag{3}$$

$$\frac{R_x}{R_3} = \frac{R_1}{R_2} \quad \text{and} \quad R_x = R_3 \frac{R_1}{R_2}$$

The measurement of an unknown resistance R_x thus requires the balancing of the bridge circuit by adjustment of the ratio arm resist-

ances R_1 and R_2 or by getting a value of R_3 for any given value of the ratio arm that will balance the bridge.

The ratio arm resistances are usually variable in steps such as 1, 10, 100, 1000 ohms each in actual commercial instruments, with R_3 a decade resistance unit variable in steps of 0.1 ohm up to 1000 ohms. With such a bridge unknown resistances from 1 ohm to 100,000 ohms or more may be accurately measured, the accuracy being determined by the accuracy with which R_1, R_2, and R_3 are known if a sensitive galvanometer is used.

Experimental Procedure

Connect a bridge as in Fig. 2–1, using any suitable values of fixed resistance for R_1 and R_2 and a variable resistance for R_3. Arrange the keys so that K_1 may be closed before K_2 and so that K_2 may be opened before K_1. This is to prevent an " inductive kick " that may damage the galvanometer if a resistance containing appreciable inductance is being measured.

With any unknown resistance in the circuit for R_x and a large value of R_3 in the circuit, tap keys K_1 and K_2 quickly and note the direction of the galvanometer deflection. Select a low value of R_3 and repeat. If the galvanometer deflection is in different directions the value of R_3 for balance lies between the two values used for R_3, one direction indicating too large a value of R_3 and the other direction too small a value of it. Vary R_3 until the galvanometer deflection is as close to zero as possible.

If R_3 is either near its maximum value or minimum value a better balance can be obtained if different ratio-arm resistances are used. Choose a new ratio of R_1 to R_2 and balance by adjusting R_3.

Under some conditions it is impossible to secure a balance. If R_x is greater than R_3 it will be necessary to use a ratio of R_1/R_2 greater than unity to secure balance.

The smallest change in R_3 will deflect a galvanometer of good sensitivity in different directions. By noting the directions and amount of deflection for two values of R_3 it is possible by interpolation to determine a value for R_3 that would give an exact balance. For example, if when R_3 is 670 ohms the deflection is 5 divisions to the left and when R_3 is 671 ohms the deflection is 7 divisions to the right, the value of R_3 for exact balance is

$$670 + \frac{5}{5+7} = 670.42 \text{ ohms}$$

1. Measure the resistance of available resistors, some of known

values to check your measurement method, and others of unknown values. Use various available unknown resistors such as transformer windings, carbon resistors, and other pieces of equipment.

2. Using three resistors measured in part 1, connect them in parallel and measure the combined resistance by the bridge method. Compare the results with those obtained in part 1. Repeat this for two and four resistances in parallel.

3. Connect two or more resistors in series and measure the resistance of the series combination. Compare the measured value with the sum of the individual resistances.

4. Compare the resistance of several different resistors as measured by the bridge method and with a volt-ohm-milliammeter.

Experiment 3

REACTANCE OF INDUCTANCES AND CONDENSERS

When an inductance coil is connected across a source of alternating-current voltage the current that flows through it will be considerably less than that predicted by Ohm's law if only the resistance of the coil is considered. This is due to the *inductance* of the coil.

Inductance is the property of a coil which opposes any change in an already established current through the coil when the voltage across the coil is changed. The power to oppose such a change in current is derived from the energy stored in the magnetic field about the coil. When the applied voltage is changed, say to a lower value, the collapse of the magnetic field induces an additional voltage in the coil. This voltage adds to the applied voltage at the coil terminals and creates, for a short period only, a higher current than that which would be due to the voltage applied at the terminals of the coil alone. The inductance of a coil is thus due to the strength of the magnetic field about the coil and is proportional to the number of turns of wire and the size of the turns. An iron core will increase the inductance of a coil also.

In an alternating-current circuit the magnitude and direction of the current is continually changing; hence inductance will oppose these changes and thus prevent as much current from flowing as would if a constant value of direct-current voltage were supplied.

The exact amount of current that will flow in an alternating-current circuit depends upon the frequency or rate of change of current and the amount of inductance present. These factors are summed up in the term *reactance*, which is equal to

$$X_L = 2\pi fL$$

where f is frequency in cycles per second and L is the inductance in henries. The reactance X_L is expressed in ohms.

Ohm's law applies to an alternating-current circuit just as it does to a direct-current circuit. The current that will flow in a direct-current circuit containing inductance only is

$$I = \frac{E}{X_L} \qquad \text{also} \qquad E = IX_L \qquad \text{and} \qquad X_L = \frac{E}{I}$$

In a condenser used in an alternating-current circuit, the current will flow into it and then out of it, because of the continuous change in direction and magnitude of the applied alternating-current voltage, the voltage first charging the condenser in one direction and then discharging it and charging it in the opposite direction. Owing to the charge stored in it, the condenser tries to maintain a steady voltage across itself by releasing current to the circuit, thus holding the value of *voltage* across itself steady for a short period of time even though the applied voltage tends to fall. This may be compared to the inductance of a coil which tends to maintain a steady *current* when the applied voltage drops.

A condenser thus permits a current to flow at all times during the alternating-current cycle. The amount of current that will flow is determined by the voltage applied, the frequency, and the capacity of the condenser. A condenser has a value of reactance that may be used to calculate its effect in an alternating-current circuit. This reactance is

$$X_c = \frac{1}{2\pi fC}$$

where C is capacity in farads, f is the frequency in cycles per second, and X_c is the capacitive reactance in ohms.

Just as with inductance, Ohm's law applies to a circuit containing capacitance.

$$I = \frac{E}{X_c} \qquad E = IX_c \qquad X_c = \frac{E}{I}$$

NOTE. When resistance is also present with inductance or capacitance the result is modified. In this experiment inductances and condensers of negligible resistance will be used. A later experiment considers circuits containing combinations of resistance, inductance, and capacitance.

Experimental Procedure

1. Using the circuit shown in Fig. 3–1, measure the reactance in ohms of several coils and condensers by the voltmeter-ammeter method at several different frequencies.

2. Calculate the value of inductance for each coil at each frequency and the value of capacitance of each condenser at each frequency measured to verify experimentally the above expressions for reactance.

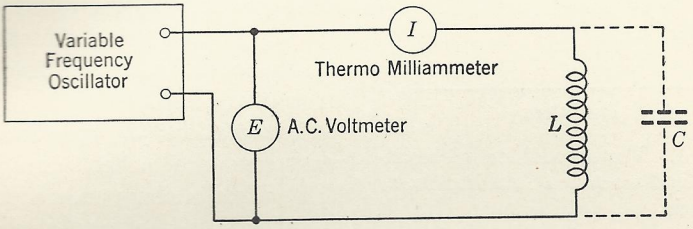

FIG. 3–1. Reactance measurement by the voltmeter-ammeter method.

3. Using an inductance coil in the same circuit, vary the frequency of the alternating-current oscillator over as wide a range as possible and determine the reactance at eight or more frequencies. Plot a curve showing how the reactance of a coil changes with frequency.

4. Repeat part 3, using a condenser instead of an inductance coil. Plot a curve showing how the reactance of a condenser changes with frequency.

EXPERIMENT 4

SERIES AND PARALLEL ALTERNATING-CURRENT CIRCUITS

Inductance coils and condensers always contain some resistance — they are never pure inductance and capacitance. We know that both reactance and resistance impede the flow of current in a circuit so if we are to determine the current that will flow in an alternating-current circuit we must consider the effect of inductance, capacitance, and resistance.

When we set up an alternating-current circuit containing inductance and resistance we find that the current flow is *not* equal to the voltage applied divided by the sum of the inductive reactance and resistance in ohms. Investigation shows that we must add reactance and resistance vectorially, i.e., in respect to the direction of the currents through each.

When an alternating-current voltage is applied across an inductance

coil the current that flows *lags* or follows the voltage[1] by one-fourth cycle or 90°. Also when an alternating-current voltage is applied across a condenser the current that flows leads the voltage by one-fourth cycle or 90°. The current flowing in a pure resistance, however, is in phase with the voltage applied. Hence currents in a reactance and resistance are 90° (one-fourth cycle) apart. In combining the effect of resistance and reactance they must be so considered.

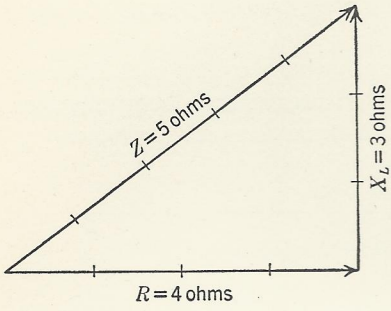

FIG. 4–1. Vector addition of resistance and reactance. An impedance triangle.

Combinations of reactance and resistance are called *impedances*. Their value in ohms when connected in series may be found as follows: Two factors whose effect is at right angles to each other may be combined graphically as shown in Fig. 4–1.

By geometry also:

$$\text{Impedance}^2 = Z^2 = R^2 + X^2$$

$$\text{Impedance} = Z = \sqrt{R^2 + X^2} \qquad (1)$$

(The square of the hypotenuse of a right triangle is equal to the sum of the squares of the other two sides.) This is called getting the vectorial sum.

Because capacitive reactance has the opposite effect to that of inductive reactance (90° lead plus 90° lag = 180° difference), the two reactances should be subtracted in calculating the impedance of series circuits containing both inductance and capacitance. The difference is then combined with resistance vectorially. Capacitive reactance is usually considered as negative and inductive reactance as positive.

For a series circuit

$$\text{Impedance in ohms} = Z = \sqrt{R^2 + (X_L - X_c)^2} \qquad (2)$$

In this formula the quantity $(X_L - X_c)^2$ is always positive and must be added to R^2. This is true even if X_c is larger than X_L, as the negative sign becomes positive when the quantity is squared. If the circuit contains resistance and inductance only $Z = \sqrt{R^2 + X_L^2}$ or if the circuit contains resistance and capacitance only $Z = \sqrt{R^2 + X_c^2}$. If neither inductance nor capacitance are present $Z = \sqrt{R^2 + 0} = R$.

[1] Henney, *Principles of Radio*, p. 115, John Wiley & Sons, New York.

When several reactances or combinations of reactances and resistance are connected in *parallel* the same voltage is applied to each. The total current flowing is the vector sum of the currents through each branch. The impedance of the combination can be determined by Ohm's law.

$$Z = \frac{E}{I}$$

where

$$I = \sqrt{I_R^2 + (I_L - I_c)^2} \qquad (3)$$

This experiment will consist in connecting up series and parallel circuits containing reactance and resistance and determining experimentally the impedance.

NOTE. The following procedure neglects the resistance of the inductance coil. Where this resistance is small, as it usually is, no appreciable error will be noted. In a series circuit, if a coil with an appreciable amount of resistance (as compared with the total resistance of the circuit) is used, the vector sum of voltage across the coil and the voltage across the resistance will be somewhat higher than the applied voltage.

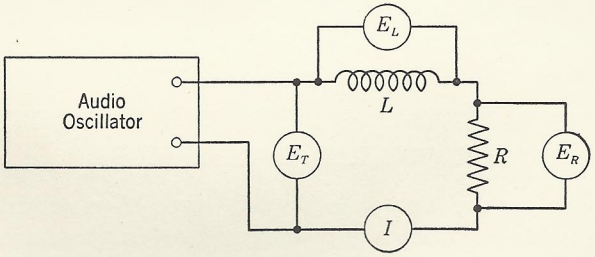

FIG. 4–2. Series alternating-current circuit.

Experimental Procedure

1. Using an audio oscillator (or a 60-cycle alternating-current source) connect an inductance and resistance in series as in Fig. 4–2 and measure (*a*) volts across combination, E_T, (*b*) current flowing, I, (*c*) volts across inductance only, E_L, (*d*) volts across resistance only, E_R. Combine the voltages (*c*) and (*d*) graphically and see if this checks voltage (*a*). Also check current flowing to see if Ohm's law applies for impedance, i.e.

$$Z = \frac{E}{I} \qquad \text{and} \qquad E = IZ$$

2. Repeat part 1, using a condenser in place of the inductance.

3. Connect a series circuit containing capacitance, inductance, and resistance in series and determine total impedance as in part 1.

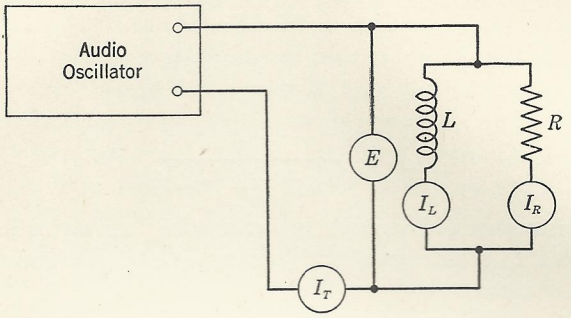

FIG. 4–3. Parallel alternating-current circuit.

4. Connect a parallel circuit containing inductance and resistance as shown in Fig. 4–3 across an alternating-current voltage source and measure (*a*) volts across parallel circuit, E, (*b*) total current, I_T, (*c*) current through inductance only, I_L, and (*d*) current through resistance only, I_R. Calculate impedance of the combination and verify Eq. 3 above from data obtained.

EXPERIMENT 5

STUDY OF ALTERNATING-CURRENT WAVES WITH THE CATHODE-RAY OSCILLOSCOPE

The cathode-ray oscilloscope is a special type of vacuum tube associated with certain auxiliary equipment and used as a measuring device. It is a most versatile instrument and may be used to determine voltage, current, waveform, phase, and other important circuit relations in both high and low frequency circuits.

The cathode-ray vacuum tube as shown in Fig. 5–1 consists of a long glass tube with a source of electrons (a filament or indirectly heated cathode) at one end emitting electrons which may be focused electrically and concentrated into a beam and made to strike a chemically treated screen in the opposite end of the tube, a fluorescent spot being visible where the beam hits the screen. This beam may be deflected by the action of voltages applied to deflecting plates or coils, the movement being visible on the screen. As this electron beam is practically free from inertia it may be used to study many phenomena resulting from fast-changing currents such as occur in alternating-

current circuits of a few cycles per second to many millions of cycles per second.

An understanding of the use of the cathode-ray oscilloscope is of importance in radio work. The spot on the screen may be made to

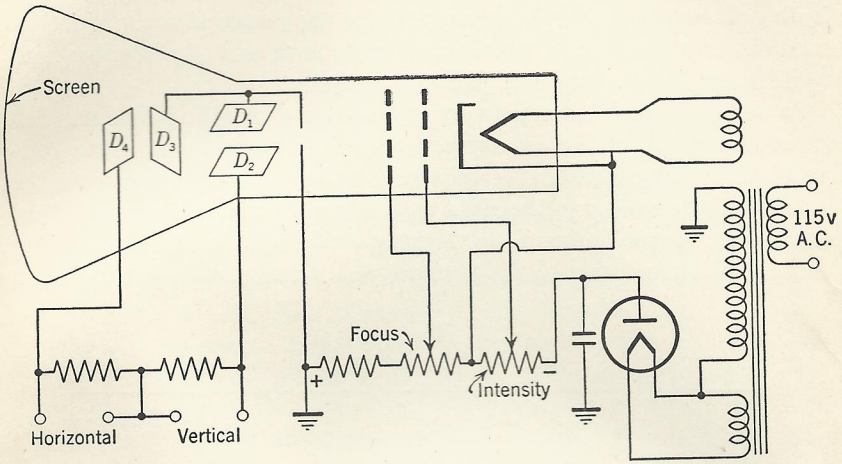

FIG. 5–1. Cathode-ray oscilloscope connections.

move at a rapid rate along a recurring path and because of the persistence of vision will appear as a complete pattern or line, but one must remember in interpreting what is seen that it is nothing more than a rapidly moving spot, moving so fast our eyes cannot follow it but rather see the path it follows as a fluorescent image on the screen.

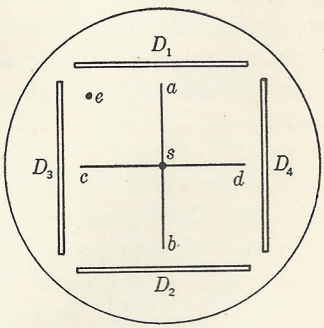

FIG. 5–2. Cathode-ray tube screen and deflecting plates showing spot movement along lines *ab* and *cd*.

Deflection of the beam or spot is accomplished by two voltages applied to deflecting plates or coils at right angles to each other as in Fig. 5–2. Electrons are negatively charged particles which will be attracted by a positively charged body or electrode and repelled by a negatively charged body or electrode. Plates D_1 D_2 cause the spot to be deflected toward the positively charged plate vertically along line *a–b*, the position of the spot depending on the polarity and magnitude of the voltage applied. When a source of changing

polarity, alternating current, is used the spot will oscillate between the plates at a speed determined by the frequency of the alternating current and with an amplitude governed by the value of the *peak* voltage impressed on the plates. Similarly, plates D_3 D_4 deflect the spot horizontally along the line *c–d*. Without voltage on either set of deflecting plates the spot will normally rest in the center as at *s*. If a constant direct-current voltage were applied to both sets of plates the spot would remain stationary at a position such as *e*.

To make the spot trace the waveform of an alternating-current voltage of any shape it is necessary to apply a *timing* voltage to the horizontal plates which moves the spot at a uniform rate of speed from the left side of the screen to the right side along a horizontal straight line. As the spot moves horizontally, making a timing axis, the alternating-current voltage applied to the vertical plates makes the spot move up

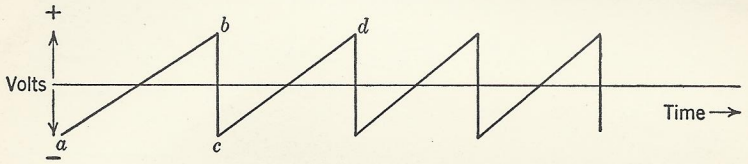

FIG. 5–3. Sawtooth waveform linear timing or sweep voltage.

and down vertically at the same time in proportion to the instantaneous value and polarity of the voltage. Thus a graph is plotted of the alternating-current waveform with time as the horizontal axis and voltage as the vertical axis. To obtain a continuous fixed pattern, the timing voltage must change instantaneously when the spot reaches the right side of the screen to a value that will return it to the left side and permit it to start its movement again and again at a constant rate of speed to form the timing axis. This is done by applying an alternating-current voltage with a sawtooth waveform to the horizontal deflecting plates as shown in Fig. 5–3.

As the voltage increases at a linear rate from *a* to *b* the spot moves horizontally at a uniform rate of speed across the screen. When it reaches *b* it quickly changes to *c*, which returns the spot to the left side of the screen ready for another trip across the screen as before. By adjusting the frequency of this timing sawtooth waveform voltage, any alternating-current voltage applied to the vertical plates can be made to remain stationary.

A synchronizing control is provided to lock the timing sweep frequency with that of the voltage under observation on the vertical plates. This sweep voltage is produced by a special type of vacuum-

tube oscillator circuit built into the same cabinet with the cathode-ray tube and its power supply. Horizontal and vertical amplifiers are also provided to amplify the voltages to be measured, increasing the deflection of the spot and controlling the size of the pattern traced by the spot.

There seems to be no limit to the usefulness of the cathode-ray oscillograph as new applications are continually being found. The flying electronic spot, which can even be made to trace pictures, is the receiving screen or kinescope of television.

A few of the applications in the measurement of alternating currents will be demonstrated in this experiment. CAUTION: The high voltages at which cathode-ray tubes work are dangerous. The greatest care should be taken to avoid coming in contact with any of these voltages, which are usually confined to the interior of the vacuum-tube mounting cabinet. Do not permit a high intensity spot or beam to remain stationary on the screen for even a short interval as it will burn the fluorescent screen, permanently damaging the tube.

Experimental Procedure

1. Spot movement and its use as a voltmeter. Apply known 60-cycle voltages to one set of plates through the amplifier with maximum gain and determine the deflections obtained, calibrating the oscilloscope as a peak voltmeter. Measure deflection with a rule or scale in inches. Plot a calibration curve of deflection in inches or centimeters against applied voltage.

2. Waveform. Apply an alternating-current 60-cycle voltage from a 6.3-volt filament transformer to the vertical plates and the internal sweep circuit to the horizontal plates, using both amplifiers. Adjust the frequency of the sweep circuit to get one, two, and three or as many complete cycles of the alternating-current voltage as possible on the screen. Experiment with the synchronizing control to determine its effect on the pattern. If the internal sweep voltage is not an exact sawtooth waveform the patterns will tend to be crowded together at one side. This is frequently the case at very low frequencies and should be recognized as a fault of the instrument rather than a distortion in waveform.

3. Waveform. Similarly, apply voltage from other available sources such as audio oscillators or hummers and note the waveforms as compared with those of the 60-cycle line voltage used in part 2.

Note the effect of applying too high an input voltage to the vertical amplifier or distortion obtained from an audio oscillator at maximum output.

4. Phase measurement. Apply a 60-cycle alternating current from a filament transformer to both horizontal and vertical plates not using the internal-sweep oscillator. Vary the amount of voltage applied to each plate separately and note the patterns obtained.

Using a phase-changing network consisting of a resistance and condenser as shown in Fig. 5–4, between the filament transformer and one set of plates, note the patterns obtained.

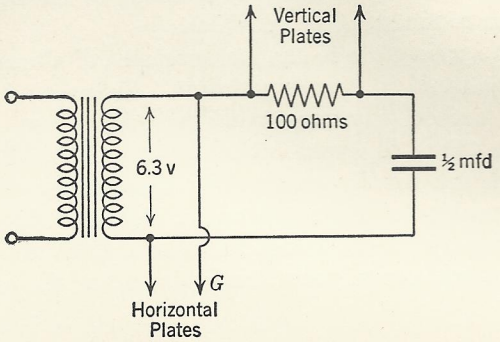

Fig. 5–4. Phase-changing network.

5. Frequency measurement. Apply a 60-cycle alternating-current to the horizontal plates and voltage from a variable-frequency audio oscillator to the vertical plates. Do not use the sweep circuit. Adjust the frequency of the audio oscillator to 120, 180, and 240 cycles or any multiple of 60 cycles and note the patterns obtained. Make a sketch of these patterns showing how the oscilloscope may be used to measure frequency ratios. These patterns are known as Lissajous figures.

Experiment 6

SERIES AND PARALLEL RESONANCE AT LOW FREQUENCIES

In a circuit containing inductance, capacitance, and resistance a very important effect occurs when the inductive reactance is equal to the capacitive reactance. This condition is called *resonance*. When we "tune" a radio circuit we adjust the circuit to resonance at the desired frequency.

In a series alternating-current circuit, as in Fig. 6–1,

$$\text{Impedance in ohms} = Z = \sqrt{R^2 + (X_L - X_c)^2}$$

$$\text{At resonance } X_L = X_c \quad \text{and}$$

$$Z = R$$

Thus the current that flows at resonance when the inductive reactance equals the capacitive reactance becomes very high and is limited only by the resistance of the circuit.

In low-resistance circuits the high current passing through the inductance and capacitance creates a very high voltage drop across each as $E = IX_L$ and $E = IX_c$. These two voltages are 180° out of phase and the sum is zero at resonance.

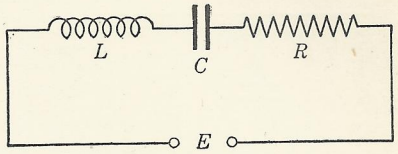

FIG. 6–1. Series resonant circuit.

The voltage step-up ratio in a series resonant circuit, i.e., the voltage across the inductance, E_L, divided by the voltage applied to the circuit, E, may readily be determined.

$$E_L = IX_L$$

$$I = \frac{E}{R}$$

$$E_L = \frac{E}{R} X_L$$

$$\frac{E_L}{E} = \frac{X_L}{R}$$

The ratio of inductive reactance to resistance is equal to the voltage step-up ratio and is called the Q of the circuit. It is a kind of figure of merit. This property of a series resonant circuit has important application in radio circuits.

The resonant rise in voltage across one of the reactances in a series circuit drops as resistance is added; hence a series resonant circuit is best adapted for use in circuits where the resistance is low.

The frequency at which resonance occurs in a series resonant circuit may be calculated if the inductance and capacitance are known.

Resonance occurs when

$$X_L = X_c$$

$$2\pi fL = \frac{1}{2\pi fC}$$

$$f = \frac{1}{2\pi\sqrt{LC}}$$

where L is inductance in henries and C is capacitance in farads.

When inductance and capacitance are connected in parallel across the source of the alternating-current voltage, as in Fig. 6–2, *parallel resonance* occurs. Such circuits possess characteristics different from those in series resonant circuits. In a circuit of this type the voltage across both X_L and X_c is the same. The current flowing through each branch is

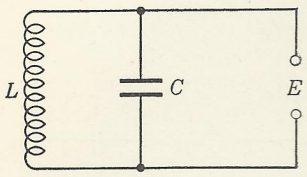

FIG. 6–2. Parallel resonant circuit.

$$I_L = \frac{E}{X_L} \quad \text{and} \quad I_c = \frac{E}{X_c}$$

Assuming negligible resistance in the inductance coil and condenser, these two currents will be equal and will be 180° out of phase or in opposite directions. They will accordingly cancel, and no current will flow in the generator circuit. When some resistance is present in either branch the currents are not exactly 180° out of phase and some resultant current will flow.

Parallel resonant circuits are suitable for use with high-impedance sources where the current flowing to or from a high-impedance generator is small and the voltage is high. The impedance of this type of circuit is high and approximately equal to X^2/R. The parallel resonant characteristic (high impedance at the resonant frequency) exists only in circuits where the connected impedance is high. The resonant frequency is approximately the same as that of a series resonant circuit and may be calculated in the same manner.

CAUTION: Use a high-resistance alternating-current voltmeter or vacuum-tube voltmeter throughout this test. A low-resistance instrument will take a considerable current, which will alter the results obtained.

Experimental Procedure

1. Calculate the values of inductance and capacitance that each give 300 ohms reactance at 1000 cycles. Use these values throughout the following tests.

With the circuit as shown in Fig. 6–3, set R equal to 50 ohms, vary the frequency from 600 to 1500 cycles, and maintain constant voltage output of 5 volts from the oscillator as observed on a high-resistance alternating-current voltmeter E with switch S in position 1. Read I and voltage across C and obtain data to plot curves of current against frequency and volts across C against frequency.

2. Repeat with R equal to 2500 ohms and note the effect of adding resistance to a series resonant circuit.

3. Parallel resonance. Using the circuit of Fig. 6–4, set R equal to 5000 ohms. Vary the frequency from 600 to 1500 cycles with constant

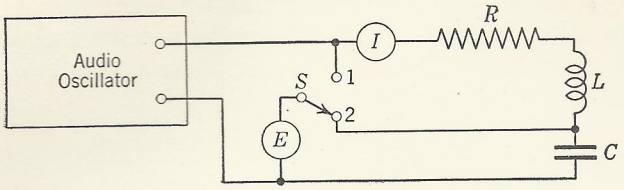

FIG. 6–3. Measurement of voltage across series resonant circuit.

voltage output from the oscillator as observed with the high-resistance alternating-current voltmeter E and the switch in position 1. Measure the voltage across the parallel circuit with the switch in position 2 and

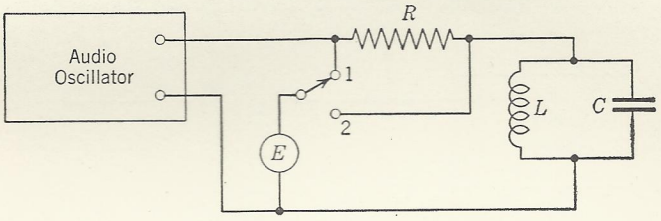

FIG. 6–4. Measurement of voltage across parallel resonant circuit.

obtain data to plot a curve showing how this voltage varies with frequency.

4. Repeat part 3 with R equal to 50 ohms and note the effect of using a parallel resonant circuit in a low-resistance circuit.

EXPERIMENT 7

RESONANCE AT HIGH FREQUENCY

Resonant circuits are commonly employed in both radio transmitting and receiving equipment. They make it possible to build up relatively large currents and voltages at certain desired frequencies and to discriminate against other undesired frequencies by keeping their voltages and currents low. This is the process of "tuning" accomplished by adjusting the capacitance and inductance of a circuit to make the *inductive reactance equal to the capacitive reactance* at the desired frequency.

At resonance the current is limited only by the resistance of the circuit, which is due largely to the wire used in the inductance. The

voltage across the inductance (which, for example, may be used to drive a vacuum-tube amplifier) is equal to the reactance of the coil multiplied by the current through it. Thus the higher the inductance and the lower the resistance, the greater the useful voltage will be. A figure of merit for an inductance taking these factors into account is called the Q of the coil and

$$Q = \frac{2\pi fL}{R} = \frac{\text{Reactance of inductance coil}}{\text{Resistance}}$$

The voltage step-up (ratio of voltage across C or L to that applied to the circuit) in a circuit at resonance is equal to the Q of the circuit.

A tuned circuit may be used as a frequency meter or wavemeter to determine the frequency of the energy in a radiofrequency circuit. At the resonant frequency of the circuit, maximum current will flow, so with suitably calibrated circuits an unknown frequency may be determined.

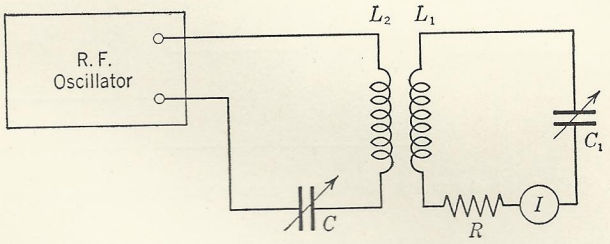

FIG. 7–1. Series resonant circuit L_1, C_1, R coupled to radiofrequency oscillator.

Experimental Procedure

1. Using the circuit of Fig. 7–1 with very loose coupling between L_1 and L_2 and R equal to zero, vary the frequency and note the dial setting of C_1 to tune L_1RC_1 to resonance. Obtain data to plot a curve of dial setting against frequency to calibrate this circuit as a frequency meter or wavemeter.

2. Adjust the radiofrequency oscillator to a frequency corresponding to resonance in the circuit L_1C_1R near the center of the dial of C_1. With R equal to zero vary C_1 and record the current I maintaining a constant value of coupling between L_1 and L_2. Plot a curve of dial-setting against current.

3. Repeat part 2 with R equal to 25 ohms, using a value of coupling to give a value of I at resonance approximately equal to that obtained in part 2. Note the difference in shape of this curve as compared with that in part 2.

4. Using the parallel resonant circuit of Fig. 7–2 with R equal to 10,000 ohms, vary C and note I_1 and I_2. Plot a curve of I_1 as C is varied.

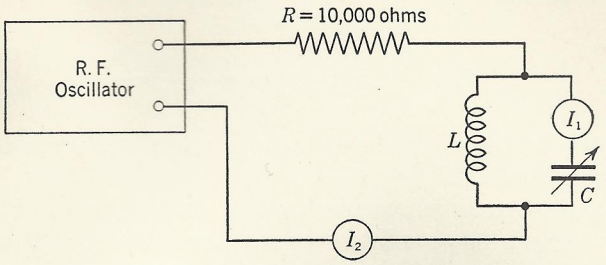

FIG. 7–2. Parallel resonant circuit.

EXPERIMENT 8

TUNED AIR-CORE TRANSFORMERS AT RADIOFREQUENCIES

Tuned air-core transformers find wide application in radio receiving and transmitting equipment of many types and an understanding of their operation is essential. They are used for many purposes including (1) to provide selectivity and gain, (2) to isolate high-voltage direct-current circuits from other circuits such as antenna circuits, and (3) to match impedance between different circuits to effect the transfer of the maximum or desired amount of power.

A transformer consists of two inductances so placed that the flux of one coil cuts that of the other. The two coils are coupled by *mutual inductance*, measured in henries. When a rate of change of 1 ampere per second in one coil induces 1 volt in the other coil, the mutual inductance is 1 henry. The closer together the two coils are the greater the coupling or mutual inductance. Increasing the number of turns in either or both coils will also increase the number of flux linkages between the two coils and consequently the mutual inductance.

When all the flux lines of one coil cut the turns of the second coil the coefficient of coupling, K, is unity. When the coils are separated or arranged so less than all the flux lines link, the coefficient of coupling, K, is less than one or

$$K = \frac{M}{\sqrt{L_1 L_2}}$$

K cannot be greater than one and is usually very much smaller than one in air-core tuned coupled circuits. It will approach one in closely

coupled iron-core transformers with high permeability cores such as used in audiofrequency transformers.

The secondary or coupled coil affects the primary coil circuit as though an impedance had been added in series with the primary equal to

$$\text{Coupled impedance} = \frac{(2\pi fM)^2}{Z_s}$$

where Z_s is the secondary impedance in ohms and M is the mutual inductance in henries.

An important case in considering two tuned circuits tuned to the same frequency is the condition for maximum transfer of energy from primary to secondary. This is the desired condition when coupling a radio transmitter to an antenna, or in coupling one radio frequency amplifier stage to another in a radio receiver. This coupling condition is known as *critical coupling* and exists when

$$(2\pi fM)^2 = R_p R_s$$

where R_p is primary resistance and R_s is secondary resistance.

If the coupling is less or more than the critical coupling value the secondary current will not be maximum. Two circuits are said to be *over coupled* when M is greater than the critical coupling value. *Insufficient coupling* exists when less than critical coupling occurs.

The selectivity (sharpness of tuning) can be varied over wide limits by varying the coupling of two tuned circuits provided the maximum transfer of energy is not required. Over-coupled circuits provide broad tuning circuits whereas insufficient coupling produces increased selectivity.

This experiment consists in setting up two tuned circuits and obtaining values of secondary current as the secondary circuit is tuned for (1) less than critical coupling (insufficient coupling), (2) critical coupling, and (3) greater than critical coupling.

Experimental Procedure

1. With the equipment connected as shown in Fig. 8–1 and R_1 and R_2 each equal to 50 ohms, tune C_1 for maximum primary current as shown by I_p *with the secondary circuit opened or disconnected.* Adjust the frequency to any convenient value that will give resonance around the middle of the scale of C_1. *Do not touch* C_1 *again after this is done.*

Close the secondary circuit and with very loose coupling tune C_2 for maximum current I_2. Without changing C_2, vary the coupling to get maximum secondary current. This is the *critical coupling* condi-

tion. With equal R_1 and R_2 note that I_1 is one-half the value obtained when the secondary was disconnected.

With this critical coupling condition, vary C_2 and note the variation in I_s over as wide a range as possible.

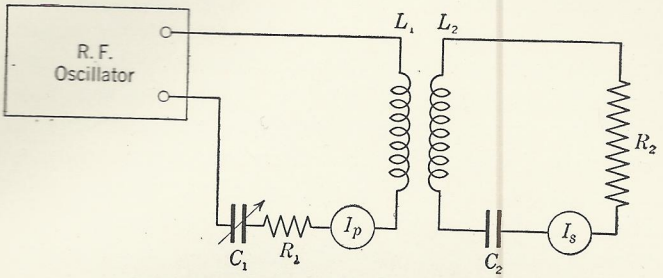

FIG. 8–1. Air-core tuned transformer test circuit.

2. Repeat part 1 with much less insufficient or less-than-critical coupling. Plot the curve of C_2 and I_s.

3. Repeat part 1 with maximum coupling obtainable between the two coils, one coil inside of the other. Plot the curve of C_2 and I_s.

EXPERIMENT 9

THERMIONIC EMISSION AND THE DIODE

Thermionic emission from the filament or cathode of a vacuum tube follows well defined laws and can be calculated accurately. However, the mathematical relationships involved are not convenient to use, and rarely do we have sufficient information available about the tubes in use to determine operating conditions in this manner. We can obtain, experimentally, complete characteristics which we need to know and which are best expressed in graphical or curve form because the vacuum tube is a nonlinear device. That is, the relation between voltage and current in the tube circuit cannot be predicted by Ohm's law, and it is not a linear or straight line relationship under all conditions.

The operation of most vacuum tubes depends upon the emission of electrons from a cathode or filament. These electrons, since they have a negative charge, are attracted by a positively charged electron collector called a plate and constitute an electric current that flows between the cathode and the plate under some circuit conditions. The number of electrons emitted is determined by the kind of material used for the cathode and the temperature of the cathode.

Vacuum tubes in use today in radio equipment have three types of cathode surfaces, (1) pure tungsten, (2) thoriated tungsten, and (3)

oxide-coated tungsten. Some cathodes are directly heated by the current flowing through them while others, principally the oxide-coated types, are indirectly heated. The maximum number of electrons emitted per unit area of cathode varies considerably with the type of cathode in use. Tungsten cathodes require a much higher temperature than the other types in practical use for the same emission.

All of the electrons emitted by a cathode may be drawn to the plate if a sufficiently high voltage is applied. Increasing the plate voltage further will not attract any more electrons, and *saturation* is said to exist if an increase in plate voltage does not cause an increase in plate current. This explains the nonlinearity of the relationship between plate voltage and plate current at high plate voltages.

At low plate voltage (below saturation), the plate is not sufficiently positive to attract all the electrons emitted from the cathode. Those electrons not attracted to the plate form a cloud or *space charge* about the cathode and, since they are negatively charged, tend to repel additional electrons emitted from the cathode, actually causing a decrease in total emission. When the filament is emitting many electrons and the plate voltage is quite low the space charge will limit the plate current to a low value. This effect explains the curvature of the plate voltage-plate current curve at low plate voltages.

The diode is a vacuum tube of two elements, a cathode and a plate. It is used in a variety of radio circuits and may best be used to study thermionic emission.

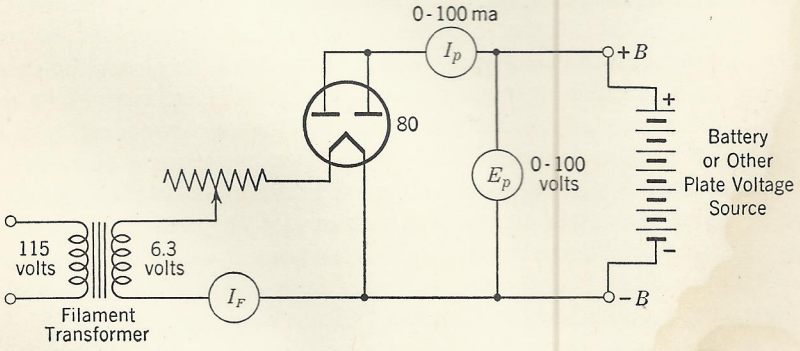

FIG. 9–1. Circuit connections to determine emission of diode.

Experimental Procedure

1. Emission. Use the circuit of Fig. 9–1 with a type 80 oxide-coated vaccum tube, connecting the two plates in parallel. Determine the direction of current flow in the plate circuit as read by the direct-

current milliammeter and connect the meter in circuit with the right polarity.

With direct-current plate voltage, E_P, held constant at about 9 volts read the direct-current plate current, I_P, for different values of filament current, I_F, from zero to 2 amperes. Plot a curve of these data with I_F for the abscissa or horizontal axis.

2. Plate characteristic. Adjust I_F to 1 ampere and vary E_P from zero to 100 volts, obtaining values of I_P for eight or ten values of E_P. Plot a curve showing how I_P varies with E_P.

3. Repeat part 2 with I_F adjusted to 1.2 amperes, 1.5 amperes, and maximum rated current of 2.0 amperes. Plot the three curves on the same curve sheet with that of part 2.

Experiment 10

CHARACTERISTICS OF A TRIODE

A triode vacuum tube is a three-element tube containing a cathode or electron emitter, a plate, and a grid. It is similar to the diode of the previous experiment with the addition of the grid, a screen or mesh of wires interposed between the cathode and plate. Voltages may be applied to this grid to control the plate current of a triode. The tube acts as a relay or valve, a small voltage change on the grid causing a large voltage or power change in the plate circuit. When a small voltage change in the grid circuit causes a change in plate current greater than a similar voltage change in the plate circuit would, the tube is said to amplify.

Two sets of curves are needed to determine the complete set of characteristics of a triode. The *transfer* or *mutual characteristic* shows how the plate current changes with grid voltage for constant plate voltage. Several of these curves of E_g versus I_p are needed for various plate voltages, often called a family of curves. The second set of curves needed is called the *plate characteristic*. It shows how plate current varies with changes in plate voltage for constant grid voltage. A group of such curves is needed to show this characteristic at different values of fixed grid voltage.

Experimental Procedure

1. Transfer characteristic. Using the circuit of Fig. 10–1 with a type 6C5G vacuum tube, apply a plate voltage of 250 volts and adjust the grid voltage in small steps from zero to 20 volts negative. Determine plate currents and plot a curve with grid volts on the abscissa or horizontal axis.

Repeat for plate voltages of 150 and 75 volts and plot on the same curve sheet.

2. Plate characteristic. Using the same circuit as for part 1, apply a negative voltage of 8 volts to the grid and vary the plate voltage

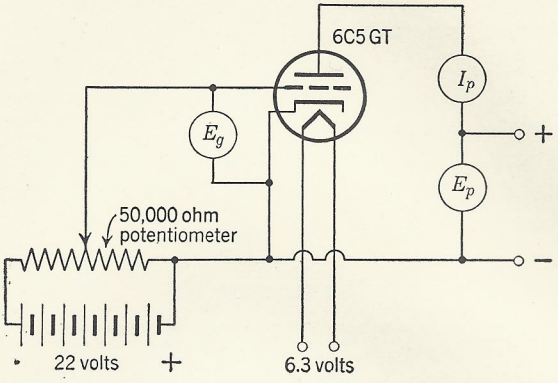

FIG. 10–1. Determination of triode characteristics.

from zero to 250 or 300 volts, noting the plate current at ten or more different plate voltages to obtain data to plot a plate-characteristic curve.

Repeat with negative grid voltages of 4, 12, and 16 volts and plot on the same curve sheet.

EXPERIMENT 11

AMPLIFICATION FACTOR, PLATE RESISTANCE AND TRANSCONDUCTANCE OF A TRIODE

Characteristic curves provide important information as to operating conditions for a specific vacuum tube. *Operating points*, the value of direct-current grid, and plate voltage for a given application may be determined from these curves. Other tube constants can be measured which provide data that can be used in calculating the performance of tube circuits.

The *amplification factor* as denoted by the Greek letter μ, mu, is a measure of the effectiveness of the grid of a tube to control the plate current as compared to the plate. It is defined as

$$\mu = \frac{\text{Plate voltage change}}{\text{Grid voltage change}}$$

necessary to produce the same small change in plate current.

The μ factor, which is very nearly constant under any operating condition, is determined by the physical structure of the tube. A fine mesh grid gives a higher μ factor than a coarse mesh grid. A grid placed closer to the cathode gives a greater μ factor than a grid farther from the cathode. The μ factor varies from 3 to 100 for triode tubes.

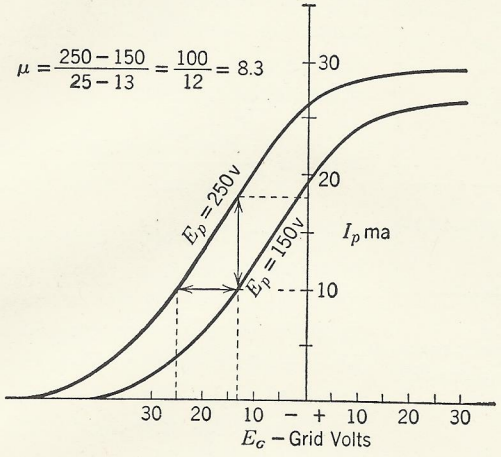

FIG. 11–1. Calculation of amplification factor from grid voltage-plate current characteristic.

The amplification factor may be determined from a family of grid voltage-plate current curves or plate voltage-plate current curves or by direct measurement. Fig. 11–1 shows a typical grid voltage-plate current characteristic of a triode. A change in plate voltage of 100 volts from 150 to 250 volts causes a change in plate current of 18 milliamperes. The same change in plate current can be made by decreasing the negative grid voltage from 25 to 13 volts. The μ factor is therefore

$$\mu = \frac{250 - 150}{25 - 13} = \frac{100}{12} = 8.3$$

Fig. 11–2 shows a dynamic method of measuring μ. An alternating-current voltage is applied to both plate circuit and grid circuit in opposite phase. The effect of the grid voltage is balanced in the plate circuit by the opposite voltage, and the ratio of the two voltages is adjusted by the potentiometer until no signal is heard in the telephones. μ is then equal to e_p/e_g. This illustrates an important use of the μ factor in computing the gain or voltage amplification. $\mu e_g = e_p$. The alternating-current voltage acting in the plate circuit can thus be determined when μ and the signal voltage applied to the grid are known.

The second tube constant useful in calculating the performance of a tube circuit is the *plate resistance* designated R_p. This is *not* the plate voltage divided by the plate current but is the ratio of a small change in plate voltage to the resulting change in plate current, a sort of spot determination of the resistance of the plate circuit at the operating point of the tube. This may be computed from a plate voltage-plate current characteristic curve.

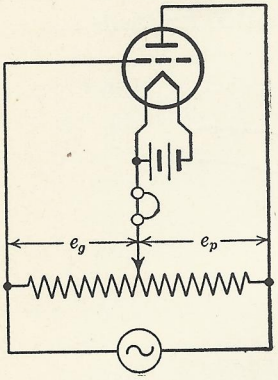

FIG. 11–2. Dynamic measurement of amplification factor μ.

$$R_p = \frac{\text{Small change in plate voltage}}{\text{Resultant change in plate current}}$$

R_p may be easily determined experimentally by making a small change in plate voltage and noting the corresponding change in plate current with constant grid voltage. As the plate voltage-plate current curve is not a straight line the value of R_p will depend upon the operating point chosen.

Transconductance or mutual conductance, g_m, is a constant which expresses the effect on plate current of a change in grid voltage:

$$g_m = \frac{\text{Small change in plate current}}{\text{Small change in grid volts}}$$

g_m may be determined from the transfer or grid-voltage plate-current characteristic curve, being the slope of this curve. It is usually expressed in micromhos (10^6 micromhos equal 1 mho). This is a most important constant as it is a measure of the effectiveness of the grid to control plate current and is an excellent basis of comparison of two tubes of the same type. It may also be determined if μ and R_p are known as

$$\mu = \frac{\text{Plate voltage change}}{\text{Grid voltage change}} \quad \text{and} \quad R_p = \frac{\text{Plate voltage change}}{\text{Plate current change}}$$

so

$$\frac{\mu}{R_p} = \frac{\Delta E_p}{\Delta E_g} \times \frac{\Delta I_p}{\Delta E_p} = \frac{\Delta I_p}{\Delta E_p} = g_m$$

where Δ denotes a small change.

Experimental Procedure

1. Measurement of μ. Using the circuit of Fig. 11–3 with a type 45 vacuum tube, set E_p at 180 volts and E_g at 32 volts and note plate current, I_p. Change E_g to 28 volts and lower plate voltage until the same value of I_p is obtained. Calculate μ, the ratio of the plate-voltage change to grid-voltage change to cause the same change in plate current.

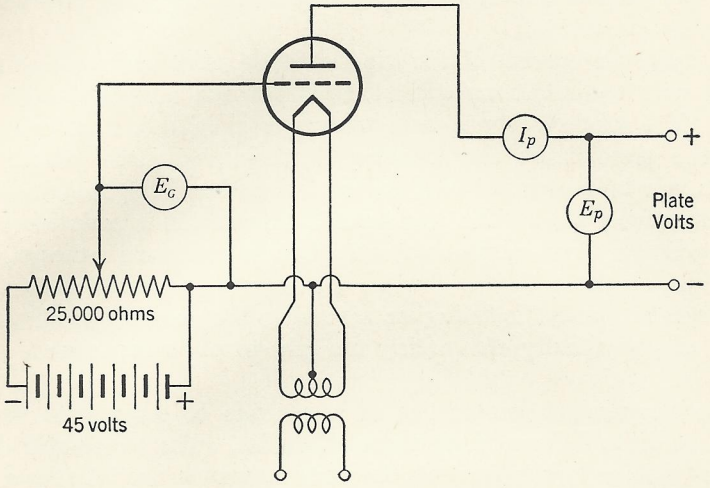

FIG. 11–3. Measurement of vacuum-tube constants.

2. Select another operating point by changing E_g to 22 volts. Make a small change in E_g and determine the plate-voltage change necessary to cause the same change in plate current, I_p, as in part 1. Compare the value determined with that obtained in part 1.

3. Measure R_p. Using the same circuit as in part 1, set E_g at 32 volts and E_p at 180 volts and note I_p. Change E_p to 200 volts and note change in I_p. Calculate R_p, the ratio of the change in plate volts to the resulting change in plate current.

Select another operating point by changing E_g to 22 volts and again measure R_p.

4. Measure transconductance. With E_p at 180 volts and E_g adjusted to 32 volts, note I_p. Change E_g to 28 volts and read I_p. Calculate g_m, the ratio of plate-current change to grid-voltage change.

5. Calculate g_m by dividing μ by R_p for each operating point and compare with measured value of part 4.

Experiment 12

CHARACTERISTICS OF PENTODE VACUUM TUBES

Pentode or five element vacuum tubes have been developed to make possible high-gain radiofrequency circuits with nearly perfect isolation of the grid and plate circuits. This is not generally possible with triode tubes owing to the relatively high interelectrode capacity between the grid and plate of the tube causing capacitance coupling between grid and plate circuits.

The pentode consists of the usual cathode, grid, and plate as in the triode with two additional grids located between the plate and control grid. The suppressor grid next to the plate between the screen grid and the plate limits the secondary emission from the plate.[1] The screen grid is located between the control grid and the suppressor grid and effectively shields the grid from the plate. It is maintained at a high positive direct-current potential but at the same radiofrequency potential as the cathode. It forms a screen at ground potential to the radiofrequency, isolating or screening the control grid from the plate and practically eliminating the grid to plate capacitance of the tube.

The electrical characteristics of a pentode or screen-grid vacuum tube are quite different from those of triodes. The screen-grid direct-current voltage largely controls the plate current of the tube for a given control-grid voltage, and changes in plate voltage have little effect on plate current. This results in a very high μ factor. Likewise a high plate resistance results as a large change in plate voltage is required to produce even a small change in plate current.

Experimental Procedure

1. Plate characteristics. Determine the plate characteristics of a type 6J7GT vacuum tube, using the circuit of Fig. 12–1. Use a fixed screen-grid voltage of 90 volts and vary the plate voltage from zero to 250 volts for control-grid voltages of zero, -1, -2, and -4 volts. Plot the four curves on the same curve sheet.

2. Mutual characteristics. Determine the mutual or transfer characteristics by changing the direct-current control-grid voltage from zero to -10 volts, with 100 volts on the screen grid and 250 volts on the plate. Repeat with 100 volts on the plate and screen. Plot the curves on the same curve sheet.

[1] Henney, *Principles of Radio*, p. 218, John Wiley & Sons, New York.

3. Amplification factor and plate resistance. Using the method of Experiment 11, attempt to determine the amplification factor and plate resistance. Note the effect on plate current of small changes in plate voltage.

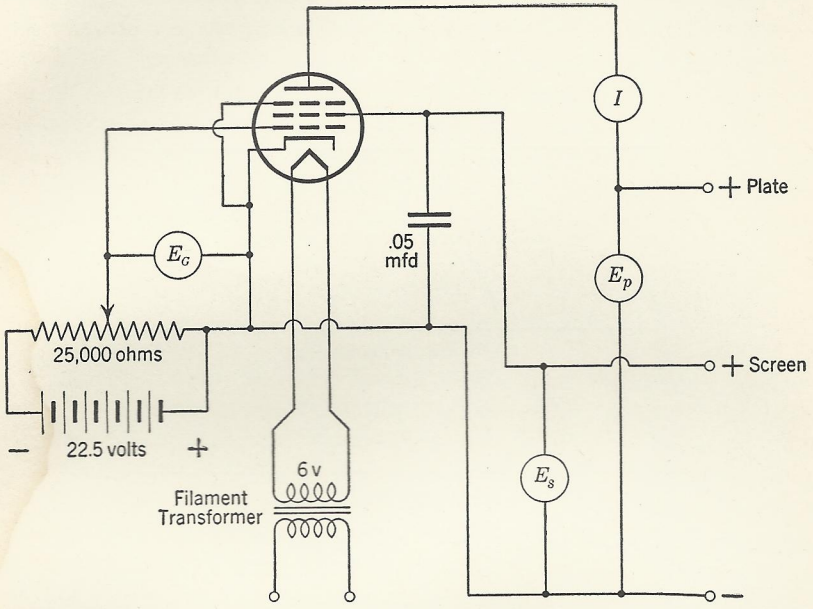

FIG. 12–1. Circuit to determine characteristics of pentode.

4. Repeat parts 1 and 2, using a pentode tube of the remote cutoff type such as a 6K7GT or 6SK7GT. Compare the characteristics of the remote cutoff type radiofrequency pentode with the type such as the 6J7GT.

EXPERIMENT 13

POWER-SUPPLY OPERATION

Direct-current high-voltage power is required for the operation of most vacuum-tube circuits used in radio communication. The most economical and convenient method of obtaining this type of power is from a power-supply unit consisting of a transformer, rectifier, and filter. The transformer provides the desired voltage from available alternating-current power, usually a 115- or 230-volt source. The rectifier permits current to flow in one direction only, giving a pul-

sating direct-current output which is smoothed out by a filter to give a steady direct-current supply at the desired voltage.

Fig. 13–1 shows at *a*, the alternating-current voltage appearing at the secondary terminals of the power transformer and impressed on the rectifier; *b* shows the output from a single rectifier connected to rectify only every other half cycle, called a half wave rectifier. At *c*

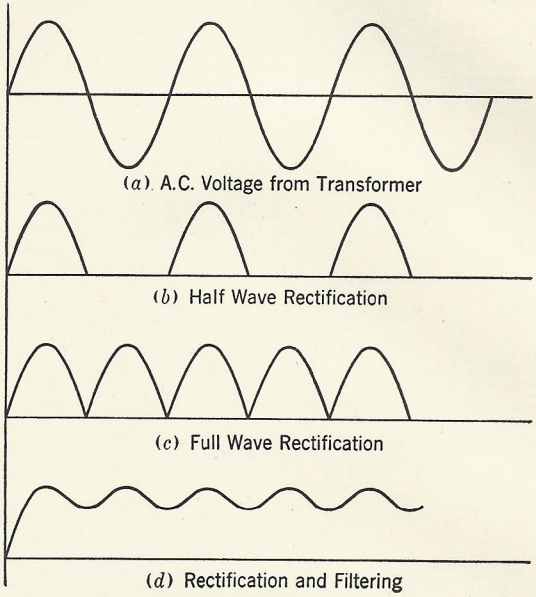

FIG. 13–1. Rectifier operation.

is shown the output waveform from a full wave rectifier using two rectifier tubes (or a single tube containing two rectifiers in the same glass envelope as a type 80), each tube rectifying a half wave in the circuit shown in Fig. 13–2.

The pulsating direct-current output of a rectifier may be smoothed out by a filter consisting of capacitance and inductance. During periods when the voltage is near the peak of the rectified wave, the condenser and inductance store energy as an electrostatic or magnetic field. When the voltage starts to drop between each half wave, energy is released to the load from the capacitance and inductance to maintain the load or output voltage during the time the rectified voltage drops to zero between half cycles and again builds up on the next half cycle. The filter makes use of the property of an inductance which impedes the change in current and that of a condenser which opposes a change in voltage.

Iron cores are used in inductances designed for use as power-supply filter chokes. This provides the maximum inductance with a given amount of wire. For low voltage power-supply units of 500 volts or less, it is customary to use the electrolytic type of condenser. This type of condenser has high capacity in small space and must be used properly with respect to its polarity. The dielectric insulation in such condensers is a thin film of aluminum oxide which has high resistance to voltage applied in one direction only. Electrolytic condensers should accordingly always be connected as marked, the positive terminal of the condenser connected to the positive side of the power-supply circuit. Paper insulation condensers are generally used at higher voltages and do not have to be connected with respect to polarity.

A bleeder resistor or high resistance load is usually connected to the output of a rectifier filter unit to improve the voltage regulation of the system. This resistor protects the filter condensers under operating periods when there is no load or a very light load on the power supply. It reduces the output voltage somewhat below the peak voltage of the rectified waves. It is customary to provide a bleeder resistor that passes from 5 to 10 per cent of the normal full load output of the power supply.

CAUTION: *Power supply circuits are dangerous. Never touch any part of the circuit when the power is turned on. Turn off the power before adjusting or changing circuits.*

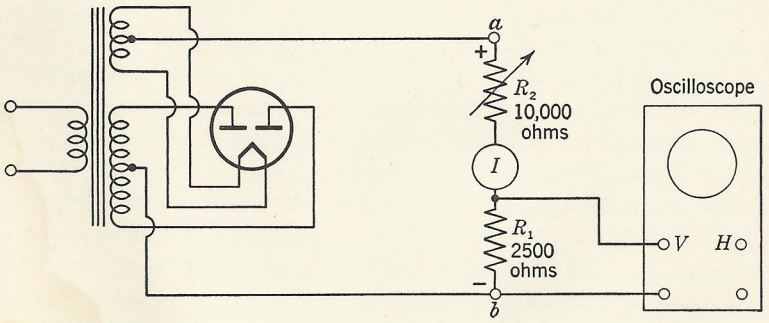

FIG. 13–2. Full wave rectifier test circuit.

Experimental Procedure

1. Connect a rectifier circuit, using a type 80 tube in a full wave rectifier circuit without filter as shown in Fig. 13–2. Be sure that the negative terminal of the rectifier is connected to the grounded terminal of the oscilloscope. Use the internal-sweep circuit of the oscilloscope,

adjusting the frequency to obtain a stationary pattern on the screen showing the output waveform of the rectifier.

Record the current through the load and sketch the waveform of the full wave rectifier circuit.

2. Disconnect the power and make a half wave rectifier circuit by disconnecting one of the rectifier plates in the rectifier tube.

Repeat observations of load current and waveform as in part 1.

3. Reconnect the circuit as a full wave rectifier as in part 1 and connect an 8-microfarad filter condenser (observe polarity if an electro-

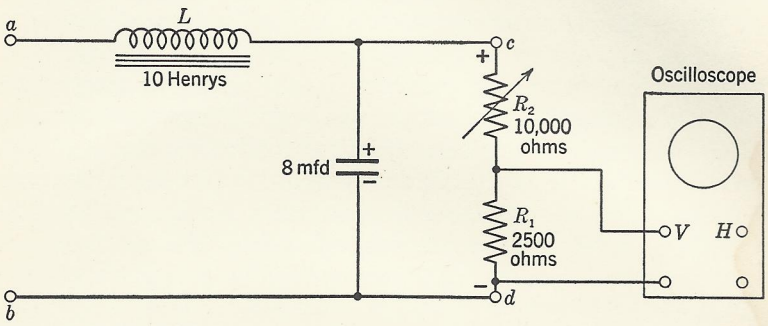

FIG. 13–3. Filter and load circuit.

lytic type) across the output of the rectifier at points marked *a* and *b* in Fig. 13–2. Repeat observations of load current and waveform as before. Note the effect of a single-filter element.

4. Connect the inductance and filter condenser as in Fig. 13–3 to the output of the rectifier. Repeat observations of output current and waveform as before, noting the operation of the simple inductance capacity filter.

Connect a copper oxide alternating-current voltmeter in series with a 2 microfarad condenser across the output terminals of the filter circuit at points marked *c* and *d* on Fig. 13–3. This meter then reads only the alternating-current voltage present on the output of the rectifier and gives an indication of the alternating-current ripple that the filter does not remove.

5. Connect a direct-current voltmeter across points *c* and *d* in Fig. 13–3. Vary the load resistor R_2 to provide variation in load current I from 10 to 100 milliamperes or as wide a range as possible. Record the voltage at ten different values of load current. Be careful not to exceed the maximum current rating of the rectifier tube or load resistor.

EXPERIMENT 14

GAIN AND FREQUENCY RESPONSE OF AUDIO AMPLIFIER

Audio amplifiers are used in practically every radio receiver and radiotelephone transmitter as well as in public address systems, telephone repeaters, and many other control devices. They are used to amplify small signal voltages containing frequencies in the audible range or below about 15,000 cycles.

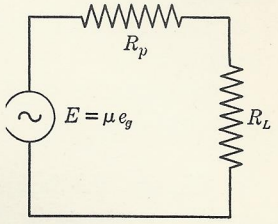

FIG. 14–1. Equivalent circuit of triode.

In a radio receiver an audio amplifier is used to amplify the relatively weak audiofrequency signal output of the detector circuit so that it will be of sufficient power to operate a loud speaker. In a radiotelephone transmitter audio amplifiers are used to amplify the feeble output of a microphone to obtain sufficient power to modulate the radio-frequency circuits.

Audio amplifiers may employ a single vacuum tube and are then called single-stage amplifiers. When more than one tube is employed, with the output of one tube driving the second, etc., such amplifiers are called cascade or multistage amplifiers.

Two types of audio amplifiers are frequently used: (1) a voltage amplifier where it is desired to amplify the signal voltage and obtain a high voltage gain or ratio of output to input signal voltage, and (2) power amplifiers, used to secure the required output power in watts to drive a loudspeaker or other load.

An examination of the equivalent circuit of a vacuum tube provides information that may be used in calculating the voltage amplification of a single or multistage amplifier. Fig. 14–1 shows the equivalent circuit of a triode. The voltage acting in the tube-plate circuit is equal to μe_g, where e_g is the grid alternating-current signal voltage and μ the amplification factor of the tube. R_p is the plate to cathode resistance and R_L is the load resistance. μe_g, the voltage impressed on the circuit, thus divides between R_p and R_L. If these resistances are equal the voltage appearing across the load, the useful output voltage, is one-half of μe_g. The larger R_L is as compared with R_p the higher will be the voltage amplification of the stage.

Experimental Procedure

1. Set up a two-stage resistance-capacitance coupled amplifier as shown in Fig. 14–2, using two type 76 triodes. Measure the voltage gain of the amplifier by applying a small 1000 cycle voltage to the in-

put and measuring the input and output voltages, (across R_1 and R_4) preferably with a vacuum-tube voltmeter or a high-resistance alternating-current voltmeter. Determine the gain for several values of plate voltages from 90 to 250 volts.

Calculate the voltage gain of the amplifier and compare with the measured value.

2. Determine the gain at other frequencies over the useful range of the amplifier.

3. Change the value of R_2, the plate-coupling resistor, to 10,000 ohms and determine the gain as in part 1 for a plate voltage of 250 volts.

4. Change the interstage coupling to make a transformer-coupled amplifier as shown in Fig. 14–3. Determine the gain for a plate voltage of 250 volts over the useful frequency range of the amplifier.

5. Using transformer coupling as in part 4, replace R_4 with a suitable output transformer and connect a load resistance to the secondary or output winding. Connect an oscilloscope across the load resistance and apply a 1000-cycle signal to the amplifier. Raise the applied signal voltage until the output waveform just begins to show some distortion. Measure the alternating-current voltage across the load resistor and calculate the power in the load resistor to determine the maximum undistorted output power of the amplifier.

Experiment 15

RADIOFREQUENCY OSCILLATOR

A vacuum tube may be used in a suitable circuit as a generator of radiofrequency energy by coupling the plate and grid circuits together in proper phase relation. A tube used in this manner *oscillates* and is called an oscillator.

Oscillators are used as a source of radiofrequency energy in a radio transmitter, as a part of nearly all modern radio receivers, and wherever a source of radiofrequency power is required.

Many types of oscillator circuits have been devised and used. Commonly-used types include the Hartley, tuned plate, Colpitts, and electron coupled. All provide for coupling the grid circuit to the plate circuit so that a certain amount of energy from the plate circuit may be used to excite the grid. This coupling may be either inductive or capacitive.

Conditions for operation of a circuit as an oscillator include (1) a required minimum amount of voltage on the grid through coupling to the plate circuit, (2) proper phase relationship between grid and plate

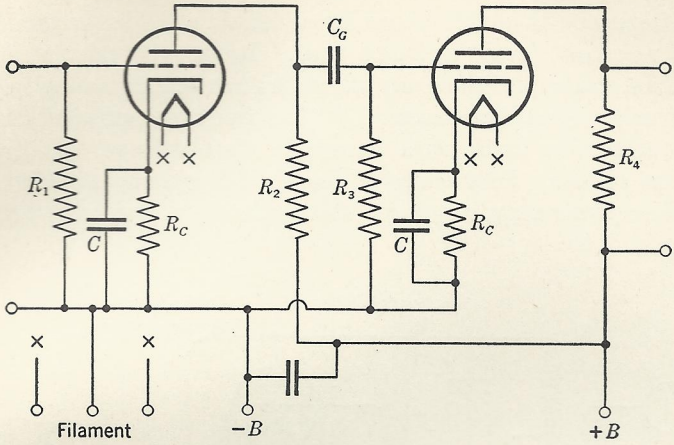

$R_1 = 500{,}000$ ohms $\quad R_C = 2500$ ohms
$R_2 = 100{,}000$ ohms $\quad R_4 = 25{,}000$ ohms
$R_3 = 500{,}000$ ohms

FIG. 14–2. Resistance-capacitance coupled amplifier.

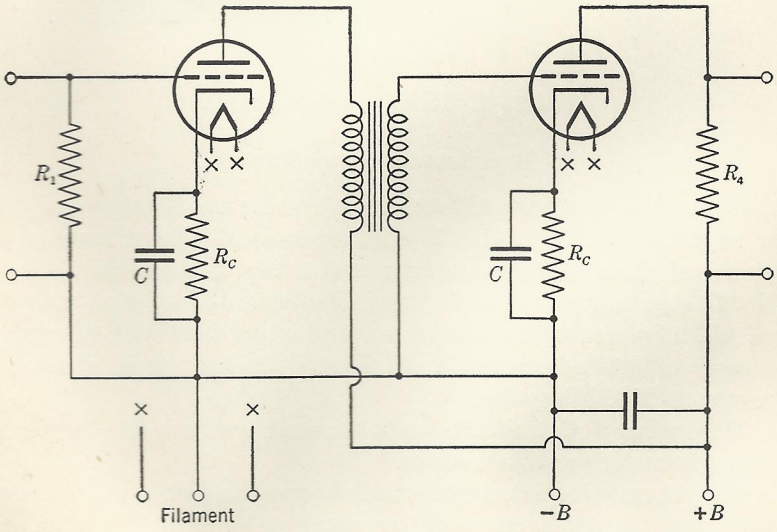

FIG. 14–3. Transformer-coupled audio amplifier.

voltages, and (3) the load placed upon the output circuit must be such that it permits conditions (1) and (2) to be satisfied.

The frequency at which the oscillator functions is determined largely by the resonant circuit elements used. It may be calculated if the inductance and capacitance are known just as in calculating any resonant circuit. (See Experiment 7.) The frequency of oscillation will vary over narrow limits with change in plate voltage, usually a few kilocycles or less. In circuits where good frequency stability is desired plate power-supply systems that maintain a constant voltage are used.

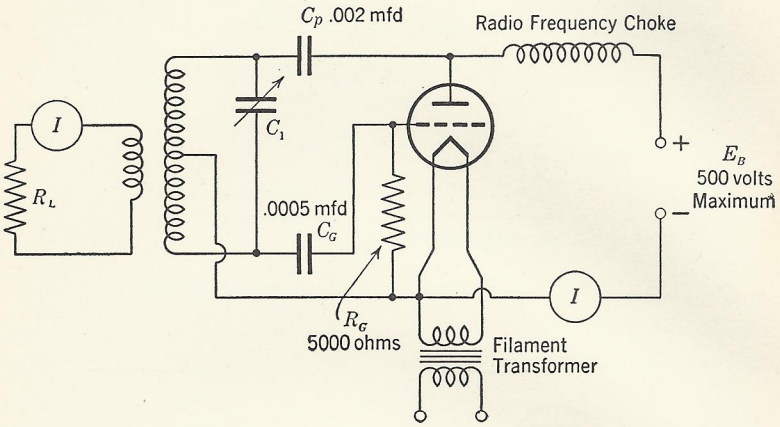

FIG. 15–1. Hartley oscillator circuit.

Experimental Procedure

1. Connect a Hartley oscillator circuit using an 809 type vacuum tube as shown in Fig. 15–1. The inductance coil should have an inductance of about 100 microhenries with a tap at the center. A coil of No. 18 gage copper wire of 70 turns close-wound on a 2-inch diameter form will have about this inductance and when used with a variable condenser of 350 micromicrofarads for C_1 will tune from about 850 kilocycles to 2000 kilocycles.

2. Determine if the circuit oscillates, and measure the frequency with a wavemeter or radio receiver.

3. Vary C_1 and the plate voltage and observe the change in frequency. Obtain data to plot a curve of frequency of oscillation against dial setting of C_1.

4. Couple a few turns of wire closely to the oscillator inductance as shown in Fig. 15–1 and connect a noninductive load resistance of about

25 ohms and thermoammeter in series. Vary the coupling by changing the number of turns or the distance between the pick-up coil and the oscillator inductance to get the maximum current through the load resistance. A few turns on the coupling will give maximum current through a low resistance load resistor, and more turns will be required if the load resistance is higher than 25 ohms or so. Load resistors from 10 to 100 ohms may be used satisfactorily.

Determine the plate power input to the oscillator circuit under maximum load, the plate voltage multiplied by the plate current giving watts input. The output power may be calculated from the thermoammeter current and the load resistance in ohms. Determine the plate efficiency of the oscillator, the output divided by the input multiplied by 100.

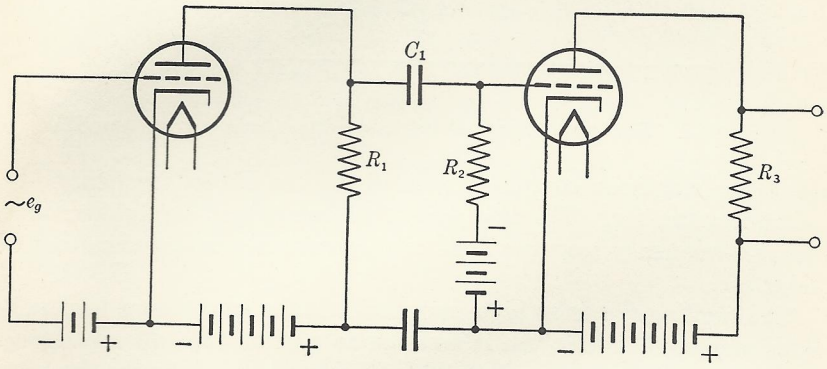

FIG. 16–1. Resistance-capacitance coupled amplifier.

EXPERIMENT 16

THE RESISTANCE–CAPACITANCE COUPLED AUDIO AMPLIFIER

The resistance-capacitance coupled amplifier is widely used because of its simplicity, economy, and wide frequency response. An understanding of its operation, particularly as to frequency response, is accordingly of importance.

Fig. 16–1 shows two triodes coupled by a resistance-capacitance network consisting of R_1, C_1, and R_2. The voltage developed in the plate circuit of the first tube appears across R_1; and the higher the resistance R_1 is, the greater the voltage amplification of this stage will be. (See Experiment 14.) C_1 is required in order that the positive-plate voltage from the first tube will not be impressed on the second tube. R_2 is

necessary to prevent the negative charges that accumulate on the grid of the second tube from blocking this tube and is called a grid leak.

The circuit shown in Fig. 16–1 may be analyzed by drawing an equivalent circuit, Fig. 16–2. The voltage developed across R_1 is in parallel with the series circuit C_1 and R_2. The voltage across C_1 is lost and not impressed on the grid of the second tube. If the reactance of C_1 is equal to the resistance R_2, only one-half of the voltage is passed along to the second grid. Hence it is desirable that C_1 have

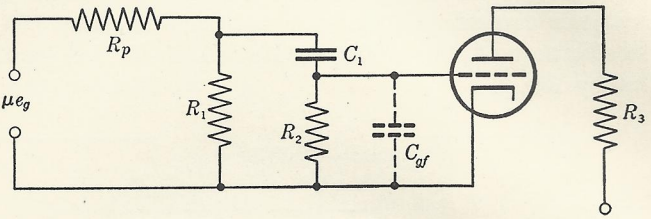

FIG. 16–2. Equivalent circuit of resistance-capacitance coupled amplifier.

very low reactance compared with R_2 at the lowest frequency it is desired to amplify. The reactance of this condenser largely determines the low-frequency response limit of the resistance-capacitance coupled amplifier.

The limiting factor at high frequencies is the capacitance in parallel with resistor R_2 due to the interelectrode grid to cathode capacitance of the tube, its socket, and wiring. This capacitance lowers the effective impedance of the input circuit and hence lowers the amplification. The higher the grid resistor R_2 the more important these stray parallel capacitances become.

It can be shown that

$$\frac{\text{Gain at high frequency}}{\text{Gain at 1000 cycles}} = \frac{1}{\sqrt{1 + \left(\frac{R_2}{X}\right)^2}}$$

where R_2 is grid-leak resistance in ohms and X is reactance of total stray capacitances at the high frequency.

Experimental Procedure

1. Using a circuit similar to that shown in Fig. 14–2, with R_2 100,000 ohms, C_g 0.10 microfarad, and R_3 100,000 ohms, determine the gain of the amplifier over a wide range of frequencies. Change C_g to 0.015

microfarad and determine the gain over the same range of frequencies. Calculate the frequency at which the reactance of C_g equals the resistance of R_3, and compare the gain at that frequency with that observed. Plot a frequency response curve of gain at various frequencies used with frequency on the horizontal axis with a logarithmic scale.

2. Determine how changing the value of R_3 in Fig. 14–2 affects frequency response at a high frequency where the gain is approximately one-half that obtained at 1000 cycles. R_3 may be varied from 50,000 ohms to 2 megohms with R_2 and C_g the same as in part 1.

3. With R_2 equal to 2500 ohms, C_g 0.10 microfarad, and R_3 5000 ohms, determine the gain over a wide range of frequencies. Determine why the gain has changed from that obtained in part 1. Plot the curve of frequency response on the same sheet with that of part 1.

4. Connect a " tone-control " circuit consisting of a 0.05-microfarad condenser in series with a 50,000-ohm resistor connected in parallel with the grid and cathode of the second tube and determine the gain over a wide range of frequencies. Plot a curve of frequency response on the same sheet with that of part 1.

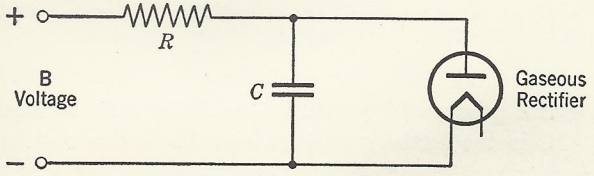

FIG. 17–1. Sweep oscillator circuit.

EXPERIMENT 17

OPERATION OF SWEEP CIRCUITS

Sweep circuits are used in cathode-ray oscillograph circuits as a timing axis and are finding application in various measurement devices. They form an important part of a television system.

A neon or gaseous rectifier tube may be used as a sweep oscillator to produce sawtoothed waveform oscillations. The characteristics of this type of tube are such that when a low plate voltage is applied a very high resistance exists between plate and cathode. As this plate voltage is gradually raised a voltage will be reached at which the gas within the tube ionizes, causing the plate-to-cathode resistance to drop practically to zero. Fig. 17–1 is a circuit using this type of tube as an oscillator. When B voltage is first applied current flows through R charging C. As C starts to charge, the voltage drop through R be-

comes smaller owing to the decreasing current. The voltage between plate and cathode at any instant is $E_B - IR$, where I is the current through R. When this voltage rises to the ionizing or firing voltage of the particular tube used the plate-to-cathode resistance drops to zero, short-circuiting the condenser and causing a higher voltage drop across R and almost instantaneously lowering the voltage to a point where the tube does not conduct or ionize. After this, the whole process repeats itself at a rate or frequency governed by the ratio of R to C.

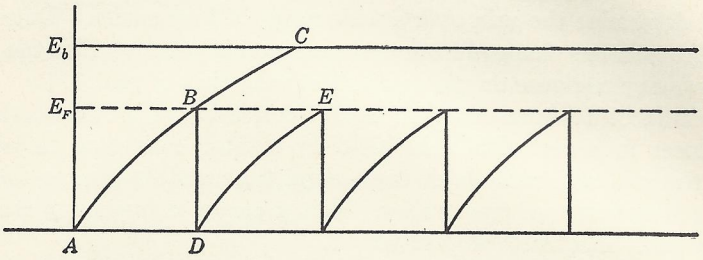

FIG. 17–2. Analysis of sweep oscillator operation. Sawtooth waveform output voltage.

The waveform produced by such an oscillator may be analyzed as in Fig. 17–2. E_b is the battery voltage and E_F is the voltage at which the gaseous rectifier fires or ionizes and becomes conducting. When the battery voltage is first applied the voltage across the condenser C rises exponentially along the curved line ABC. The tube fires when voltage E_F is reached, reducing the voltage to zero practically instantaneously along line BD, charging again along DE and thus repeating.

Gaseous rectifiers are usually employed that have a grid such as types 884 and 885, which controls the voltage at which the tube fires. Making the grid more negative raises the voltage at which the tube fires. This would have the effect of increasing the length of the AB portion of the curve of Fig. 17–2. After the tube fires over, the grid loses control and changes in grid voltage do not cause changes in the plate resistance of the tube. Control is restored to the grid only when the tube stops conducting owing to a failure of plate voltage. Action is instantaneous and control may be restored to the grid at the end of each half cycle of an alternating-current voltage applied in the plate circuit when the instantaneous value passes through zero.

Experimental Procedure

1. Grid control. Fig. 17–3 shows a circuit that may be used to determine how a variation in grid voltage controls the firing voltage. Set up this circuit and with −5 volts on the grid of either an 884 or an 885 tube, increase plate voltage gradually and note voltage at which the tube becomes conducting, as shown by a glow between elements

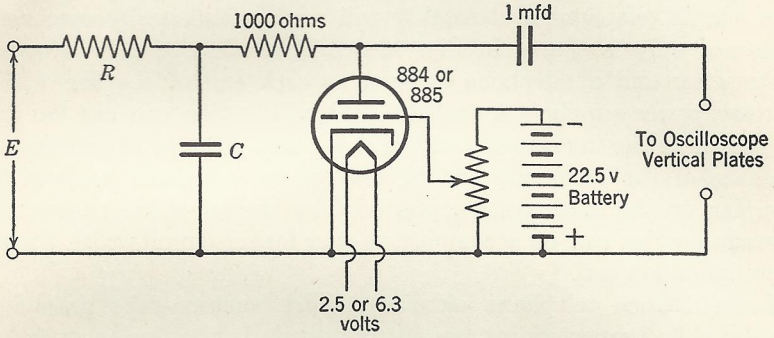

FIG. 17–3. Circuit to obtain gaseous rectifier characteristics.

of the tube and a starting of oscillations. Do this for eight or ten values of grid voltage from −5 to −20 volts. Plot a curve of plate volts required to fire the tube against grid-control voltage.

2. With the same circuit observe the waveform on an oscilloscope for a grid voltage of −10 volts and E_b of 150 volts, R equal to 100,000 ohms, and C at 1 microfarad. Sketch the waveform.

Change R to 50,000 ohms and note the effect on frequency and peak value of the waveform.

Repeat with R equal to 100,000 ohms and C at 0.1 microfarad.

3. Increase plate voltage to 250 volts or maximum obtainable with maximum negative grid volts at which the tube will fire.

Decrease the negative grid voltage in several steps to −5 volts and note change in waveform.

EXPERIMENT 18

TELEPHONE CIRCUITS AND WIRE TELEPHONE TRANSMISSION

Wire telephone systems are of two general types, magneto or rural line and common battery systems such as used in the larger city systems. In the magneto system, dry cells are used as a source of power

at each telephone instrument, and ringing current is generated by a hand operated magneto. Common battery systems provide power from a power-supply source located at an exchange or central office, a single battery or other direct-current power source and a ringing generator being used for all telephones in the area. Fig. 18–1 shows the circuit used in a magneto telephone circuit, and Fig. 18–2 illustrates a common battery system.

A simple telephone system that will work satisfactorily over short distances only is shown in Fig. 18–3. It consists of only a carbon transmitter and a telephone receiver at each end of the line with a battery power supply. A transformer or induction coil can be used as shown in the instruments of Fig. 18–1 and 18–2 to match the impedance of the telephone line to that of the telephone transmitter, stepping up the small voltage produced by the telephone transmitter. Communication can be accomplished over longer circuits with the use of an induction coil.

Long-distance telephone circuits require vacuum-tube amplifiers, usually called repeaters, at frequent intervals in the line to overcome the high attenuation or losses in a long line. Open wire circuits on poles have considerably less loss than cable circuits.

The following table gives the transmission loss in various types of telephone lines.

Type of Line	Decibel Loss per Mile	Capacity Microfarads per Mile	Resistance Ohms per Mile
Open wire			
No. 12 copper	0.125	Varies	8
No. 16 cable	0.75	0.072	23
No. 19 cable	1.3	0.09	46
No. 22 cable	1.8	0.09	92
No. 24 cable	2.2	0.08	145
No. 26 cable	2.7	0.08	230

Transmission through telephone circuits may be calculated provided the resistance, capacitance between wires of each pair, leakage resistance between conductors, the inductance per mile, and the frequency are known.

$$I_r = I_s(2.718^{-\alpha l})$$

where I_r is the received current at distant end,

I_s is current at the transmitting end,

α is an attenuation constant, determined by circuit constants,

l is the length of circuit in miles.

Owing to the capacitance between the two telephone wires, higher frequencies are attenuated more than lower frequencies. An equalizer

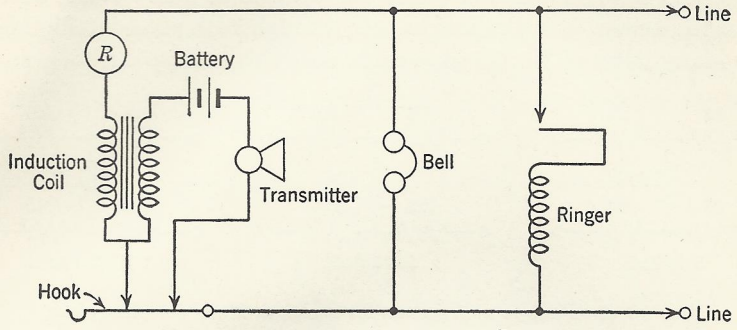

FIG. 18–1. Magneto battery telephone set.

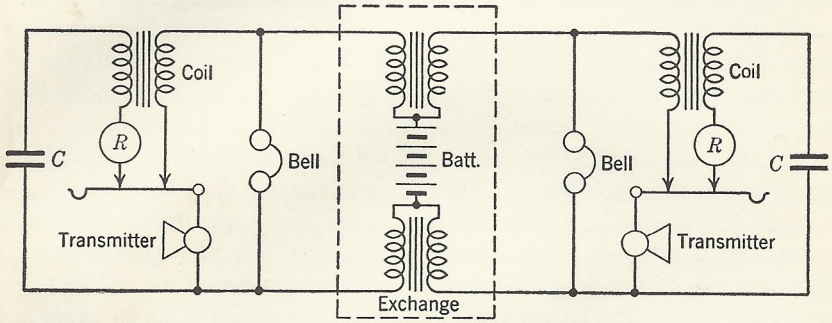

FIG. 18–2. Common battery telephone system.

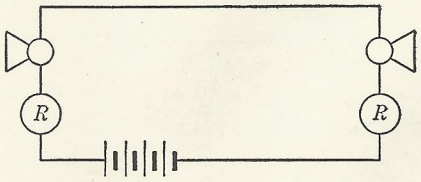

FIG. 18–3. Simple telephone system.

is sometimes used to compensate by cutting down the low frequencies in high-quality circuits, thus making it possible to transmit both low and high frequencies with the same efficiency.

Experimental Procedure

1. Carefully inspect a telephone receiver and carbon transmitter. Draw a simplified diagram of each, showing the principal parts.

2. Using two magneto telephones connected together through an artificial telephone line of adjustable length or loss, talk through the circuit and note the effect of different lengths of line. What amount of loss in decibels is it possible to talk through with good intelligibility? How many miles of No. 22 gage cable does this correspond to?

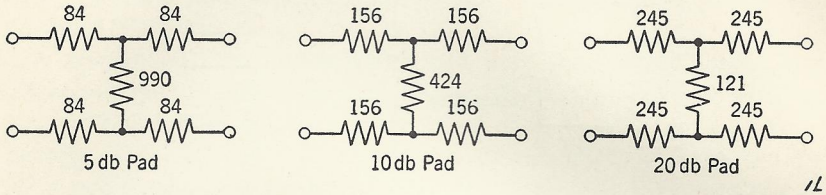

FIG. 18–4. Pads or attenuators for use as artificial telephone line.

A simple resistance network that simulates the loss in a telephone line can be set up using the three " pads " shown in Fig. 18–4. These pads can be used singly or in series to give any value of attenuation from 5 to 35 decibels in steps of 5 decibels. However, this type of pad does not discriminate as to frequency as in an actual telephone line but gives a reasonably close approximation to actual conditions.

3. Using an artificial telephone line or the pads shown in Fig. 18–4, apply a constant voltage at 1000 cycles to the input of the line. Terminate the line with a 600-ohm resistance and measure the received voltage as the length of the line is varied or the total loss is changed. Plot a curve of line length or loss against received voltage. A copper oxide type of alternating-current voltmeter may be used to measure both transmitted and received voltage.

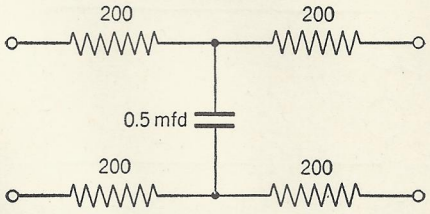

FIG. 18–5. Artificial line.

4. Using the artificial line of Fig. 18–5, terminate the line with a 600-ohm resistor. Apply a constant input voltage from a variable-frequency audio oscillator of about 10 volts and measure the received voltage for 100, 200, 400, 800, 1600, 3200, and 6400 cycles. Plot a curve of received voltage against frequency. Plot frequency on the horizontal axis with a logarithmic scale.

EXPERIMENT 19

PUBLIC ADDRESS SYSTEMS. THE DECIBEL

Public address systems are used to enable a large audience to hear a speaker or performer. They consist of a microphone or phonograph pickup device to convert sound or recordings into electrical energy, an amplifier to amplify the electrical energy, and a loud speaker which converts the amplified electrical energy into sound.

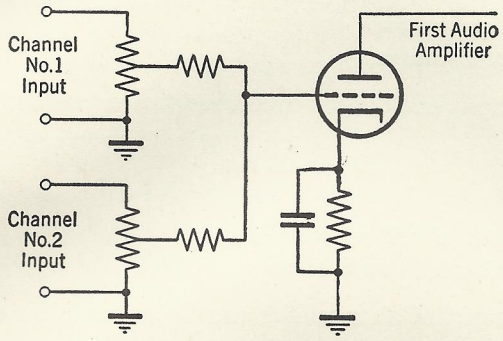

FIG. 19–1. Two-channel mixer for public address amplifier.

Many types of microphones are in use today to meet various operating conditions. Crystal microphones operating on the piezo electric principle, using Rochelle salt crystals, provide excellent response at low cost. Dynamic and velocity or ribbon microphones operate on the principle of the electrical generator, sound waves causing a coil or ribbon conductor to move in a magnetic field. Different arrangements of baffles and mountings are used to provide directional characteristics. All microphones producing uniform frequency response have a very low output voltage under normal operating conditions.

Amplifiers suitable for use in public address systems must have high voltage gain and good output power to drive loud speakers at a desirable output level. Input circuits are often arranged to use several microphones, controlling the gain of the amplifier on each input circuit or channel so that the output of two or more microphones may be mixed to produce the desired effect. Fig. 19–1 shows a typical circuit of a two-channel input system.

The power output of an audio amplifier is frequently measured in decibels above a certain reference power level. The decibel or *DB* is defined as

$$DB = 10 \log \frac{P_1}{P_2}$$

where P_1 is the output power and P_2 the standard reference-level power. The decibel is thus a *ratio* between two power levels. The difference between two voltages may be expressed in decibels also, provided the circuit resistance at the point of measurement of input and output voltages is the same. Since power is proportional to the square of the voltage in such a circuit

$$DB = 20 \log \frac{E_1}{E_2}$$

where E_1 is output voltage,
E_2 is input voltage.

Where the input and output circuit resistances are not the same

$$DB = 20 \log \frac{E_1}{E_2} \sqrt{\frac{R_2}{R_1}}$$

Here R_1 is output circuit resistance, and
R_2 is input circuit resistance.

Thus the output of an amplifier can be expressed in decibels above some standard reference level. A standard reference level of 6 milliwatts is often used in public-address work. Also the voltage gain of an amplifier may be expressed in decibels, the ratio of the output to input voltage.

The decibel is used in the measurement or comparison of voltage and power levels in sound-reproducing equipment as these units produce equal increases or decreases in intensity to the human ear. Alternating-current voltmeters may be used to indicate voltage ratios across a line of fixed resistance or impedance and may be directly calibrated in decibels above or below a standard reference level. Such meters are called volume indicators and are usually calibrated to read on circuits of 500 ohms resistance. High-speed movement meters are used to observe the output of public-address amplifiers, the meter needle following voice or music.

Experimental Procedure

1. Set up a microphone, amplifier, output meter, and loud speaker and experiment with placement of microphone and loud speaker, noting the maximum gain settings for different arrangements without acoustic feedback between microphone and loud speaker. Determine in decibels the smallest change in output power that can be detected by ear. Note relative volume levels as power output changes. Try power outputs of one-tenth watt to several watts.

2. Using a variable-frequency audio oscillator, calibrated attenuator, and alternating-current voltmeter connected as shown in Fig. 19–2, determine maximum gain of the amplifier at 1000 cycles in decibels. Use a suitable load resistor in place of the loud speaker equal to the impedance of the loud speaker unit.

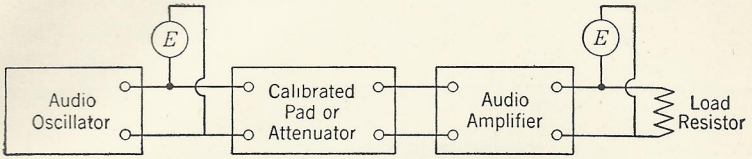

FIG. 19–2. Gain and output power measurement of audio amplifier.

The gain may be determined either by measuring the value of the input and output voltages and calculating the ratio in decibels or by adjusting the attenuator to have the same loss as the amplifier has gain as indicated by the same input and output voltages. Under this condition there will be as much loss in the attenuator as there is gain in the amplifier.

3. Apply a constant input voltage of varying frequency between 50 and 10,000 cycles and determine the over-all frequency response or fidelity of the amplifier. Plot a curve using a logarithmic scale for frequency.

EXPERIMENT 20

CLASS A VACUUM-TUBE AMPLIFIER

A class A amplifier is an amplifier in which the grid bias and alternating grid voltages are such that plate current in a specific tube flows at all times. (Definition from *Standards on Electronics*, Institute of Radio Engineers.)

This type of amplifier is widely used as a voltage amplifier at both audio and radiofrequencies and as a power amplifier when only a few watts of power is desired. The plate efficiency is relatively low.

Class A amplifiers operate on the straight line section *a b* of the grid voltage-plate current characteristic curve of the tube, Fig. 20–1. An operating point *c* is chosen near the center of the straight line portion, where the grid is always negative.

Thus plate current flows during all portions of the cycle as alternating grid voltage is applied. Grid current does not flow as the grid is never positive.

A class A amplifier reproduces in its plate circuit an exact replica

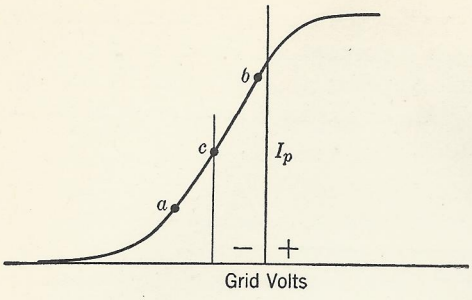

FIG. 20–1. Class A amplifier operation.

of the grid voltage waveform and when properly operated (1) has low distortion, (2) requires little or no power to drive (as no grid current flows), (3) alternating-current plate voltage is linear with respect to applied alternating-current grid voltage, (4) average value of direct-current plate current (as read by direct-current meter) is constant under all conditions of operation.

Experimental Procedure

1. Set up an audio amplifier as shown in Fig. 20–2 with a resistance load connected to the output through a suitable output transformer. Apply rated plate and screen voltage. Look up the recommended operating conditions for the tubes in use as given in a tube manual. Note particularly plate voltage, output load, impedance, and power output.

2. Apply a 1000-cycle voltage of good waveform to the input of the amplifier. Connect a cathode-ray oscilloscope and an alternating-current voltmeter across the load resistor to determine maximum output power without distortion. Repeat for six or eight values of load resistance both above and below the recommended value.

Plot a curve of power output in watts against load resistance and determine that value of load resistance that gives maximum undistorted power output.

3. Using the same connections as in part 2, apply a 1000-cycle input voltage from zero to the maximum that can be applied without distortion and note (1) input voltage, (2) output voltage across load resistor, (3) direct-current plate current, and (4) direct-current plate voltage.

Plot three curves on the same graph sheet:

(*a*) Plot a curve of input volts against output volts to see if the amplifier is linear.

(*b*) Plot a curve of plate efficiency (output watts divided by direct-current plate current times direct-current plate volts) against input voltage.

(*c*) Plot direct-current plate current against input voltage.

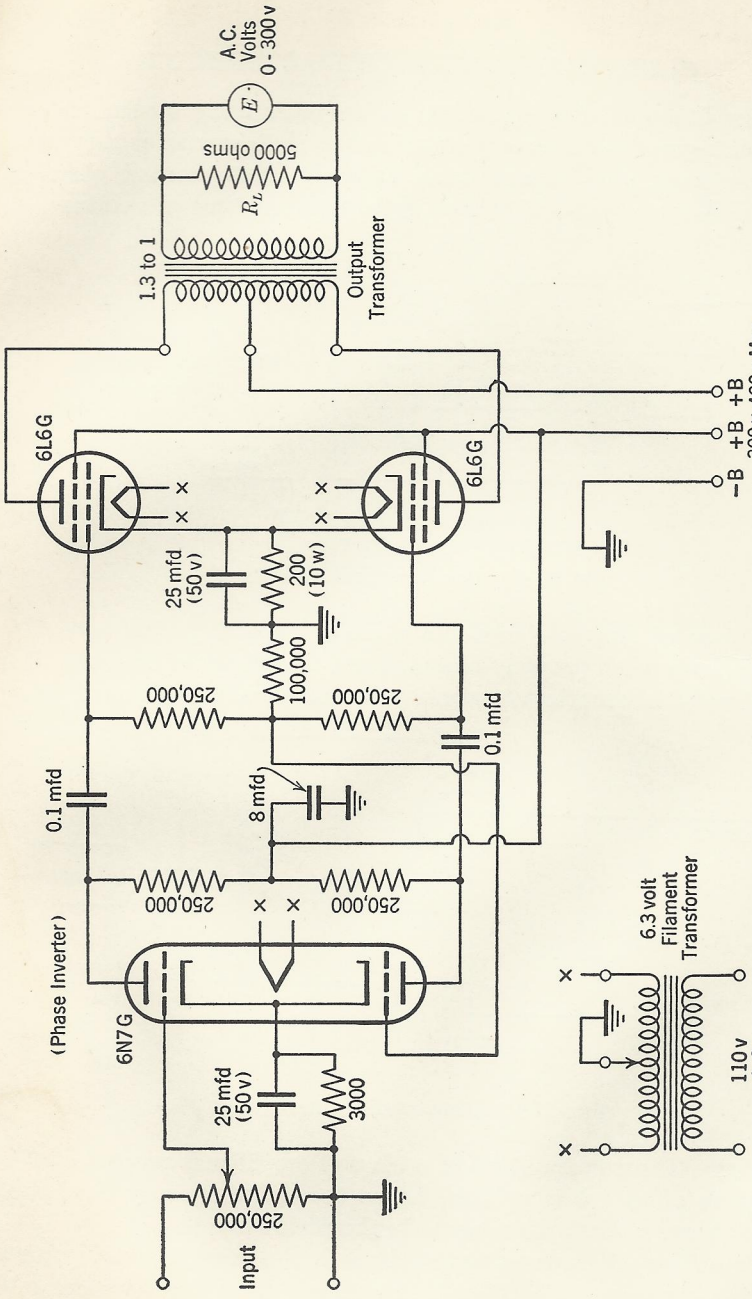

FIG. 20–2. Resistance-capacitance coupled audio amplifier with phase inverter.

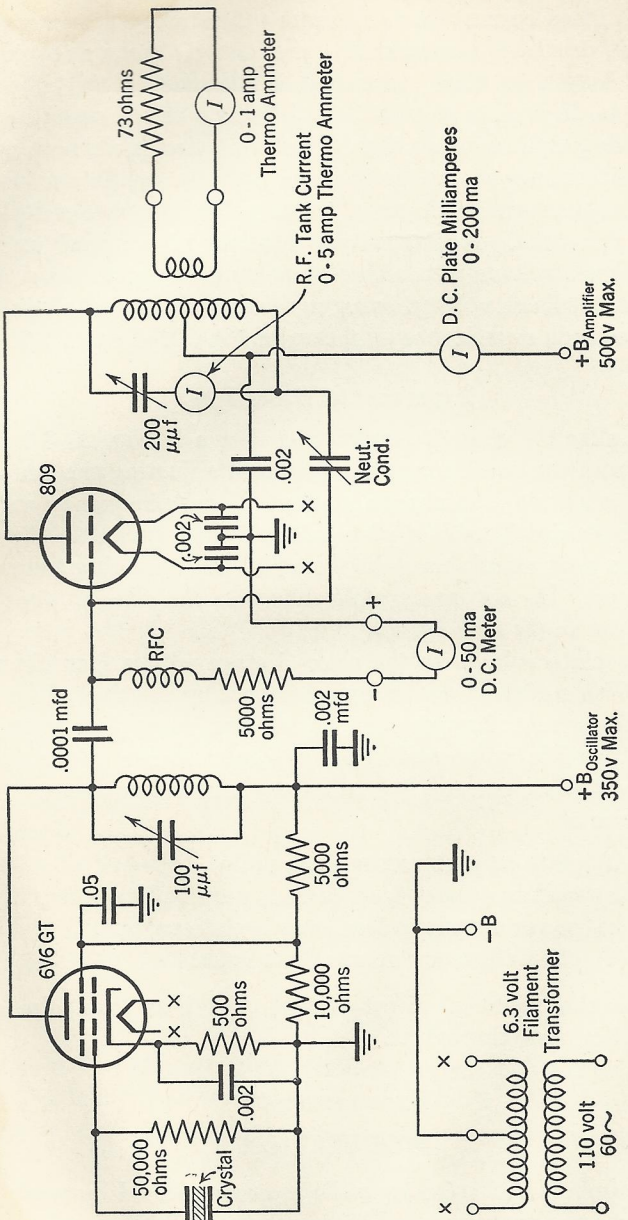

FIG. 21–3. Class C neutralized radiofrequency amplifier with crystal oscillator driver.

efficiency. Plate current flows in short pulses and the resonant plate tank circuit oscillates continuously, producing a near sinusoidal output. The length of time, expressed in degrees of the alternating-current cycle, that plate current flows is known as the operating angle.

Any triode amplifier using high Q resonant circuits in both grid and plate circuits must be neutralized to prevent oscillation owing to coupling between grid and plate circuits through the grid-plate capacity of the tube. Neutralization consists of coupling an out-of-phase feedback voltage into either plate or grid circuit equal and opposite to the feedback voltage owing to the capacitance coupling through the interelectrode capacitance as shown in Figs. 21–1 and 21–2.

Experimental Procedure

1. Neutralize the class C amplifier as shown in Fig. 21–3 by applying drive from the oscillator to the grid and adjusting the neutralizing condenser to obtain a minimum amount of radiofrequency current in the plate-tank circuit *without plate voltage* being applied to the class C stage. The tank circuit must be tuned to the operating frequency of the oscillator. *Do not apply plate voltage to the class C stage with a sensitive meter in the tank circuit.*

2. Apply plate voltage to the class C stage with a load circuit connected. With sufficient excitation, as shown by relatively high direct-current grid current through the grid resistor, vary plate voltage over maximum possible range and read (1) direct-current plate volts, (2) direct-current plate current, (3) radiofrequency load current.

Plot curves of

(*a*) plate current versus plate volts,
(*b*) radiofrequency load current versus plate volts,
(*c*) power output to load versus plate volts,
(*d*) plate efficiency versus plate volts.

Calculate the value of direct-current grid bias from size of grid resistor and current through it.

Experiment 22

MODULATION

The transmission of voice by radio is accomplished by *modulating* a radiofrequency carrier wave. This is necessary because it is not practical to attempt to radiate the audiofrequency energy of speech. Modulation consists in varying the amplitude of the radiofrequency carrier wave in accordance with the waveform of the voice.

In Fig. 22–1 an unmodulated radiofrequency carrier wave is shown at (*a*) and a sine wave of audiofrequency at (*b*) that it is desired to transmit. The unmodulated carrier is modulated by varying the amplitude or moulding the radiofrequency carrier as shown at (*c*) by varying the plate voltage applied to the radiofrequency amplifier being modulated. The peak value of the radiofrequency voltage varies at the audiofrequency rate.

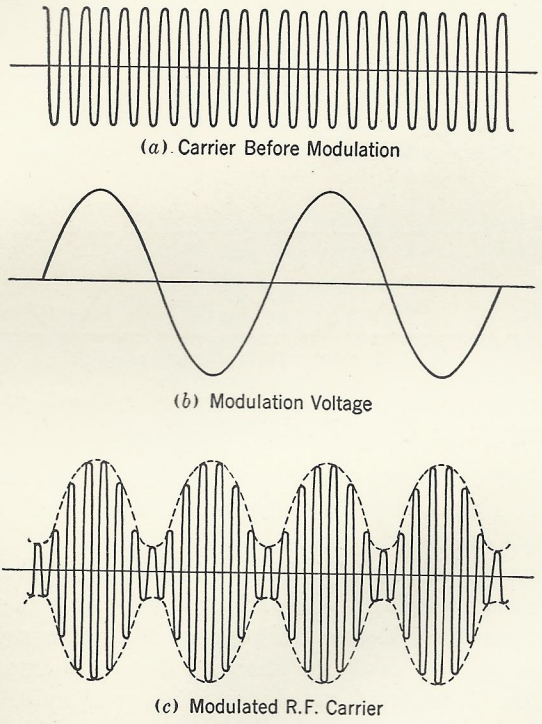

FIG. 22–1. Modulation of a radiofrequency carrier.

Plate modulation of a high-efficiency class C radiofrequency amplifier is the most common method of producing a modulated carrier. In Fig. 22–2 is shown at (*a*) a graph of the constant direct-current plate voltage before modulation is applied. At (*b*) is shown how the alternating-current modulating voltage is superimposed on the direct-current plate voltage to provide a plate voltage that follows the waveform of the signal or modulation voltage. The audiofrequency output of the audio amplifier, called a modulator, is applied in series with the direct-current plate voltage of the class C amplifier as shown in Fig. 22–3.

A carrier wave is not always fully modulated as shown in Fig. 22–1. When the peak value of the modulating voltage is less than the direct-current plate voltage the radiofrequency carrier "valleys" do not come to zero, and the carrier is said to be modulated less than 100 per cent.

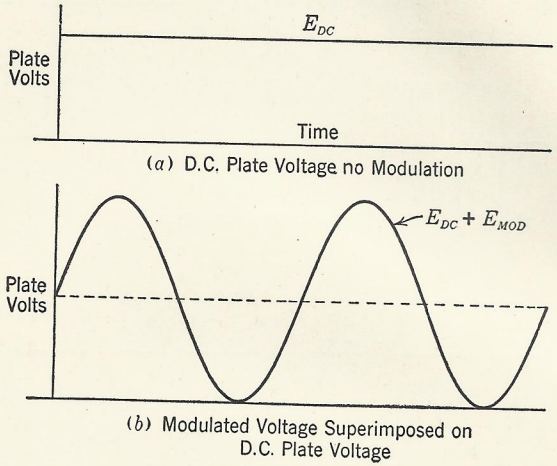

FIG. 22–2. Plate modulation.

A cathode-ray oscilloscope may be used to determine the percentage modulation of a radiofrequency carrier. The wave envelope pattern corresponding to that shown in Fig. 22–1*c* may be obtained by using the connections shown in Fig. 22–4. The internal sweep circuit is used on the horizontal plates with radiofrequency voltage applied without amplifier direct to the vertical plates. A small amount of radiofrequency voltage may easily be obtained from a pickup coil coupled to the amplifier tank circuit as shown. It is preferable that the internal amplifier on the vertical plates not be used as it is seldom useful at radiofrequencies.

Fig. 22–5 shows another useful method of measuring percentage of modulation and even other operating conditions. A trapezoidal pattern similar to that shown in Fig. 22–6 is obtained. Complete modulation (100 per cent) results in a triangle pattern. This method is most useful for observing percentage modulation of a radiotelephone transmitter as the pattern remains stationary regardless of the modulation frequency.

This experiment will use the class A audio amplifier of Experiment 20 as the modulator for the class C radiofrequency amplifier of Experiment 21.

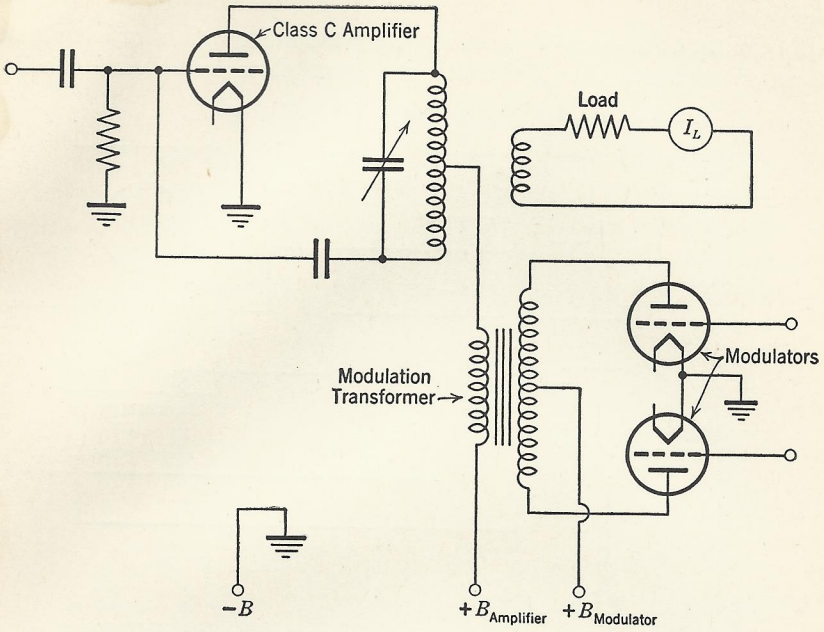

FIG. 22–3. Plate modulation of a class C radiofrequency amplifier.

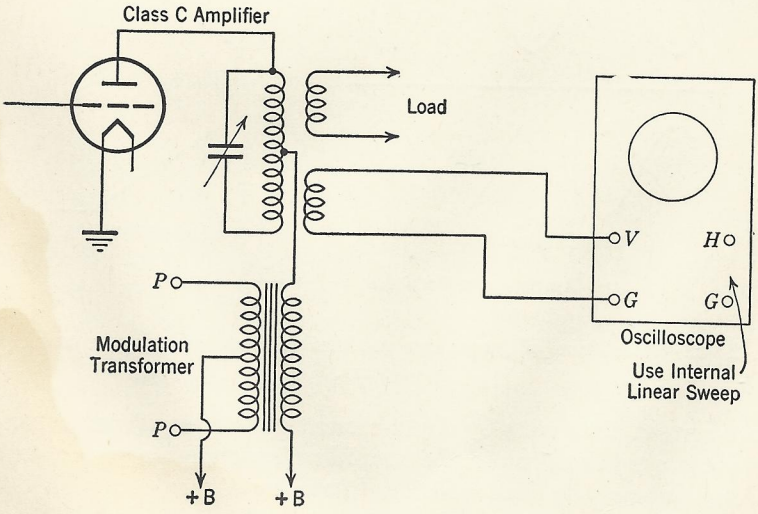

FIG. 22–4. Connections for measuring modulation by wave envelope pattern.

Experimental Procedure

1. Connect the class C radiofrequency amplifier with a resistor load as in Experiment 21. Calculate the total plate impedance (divide

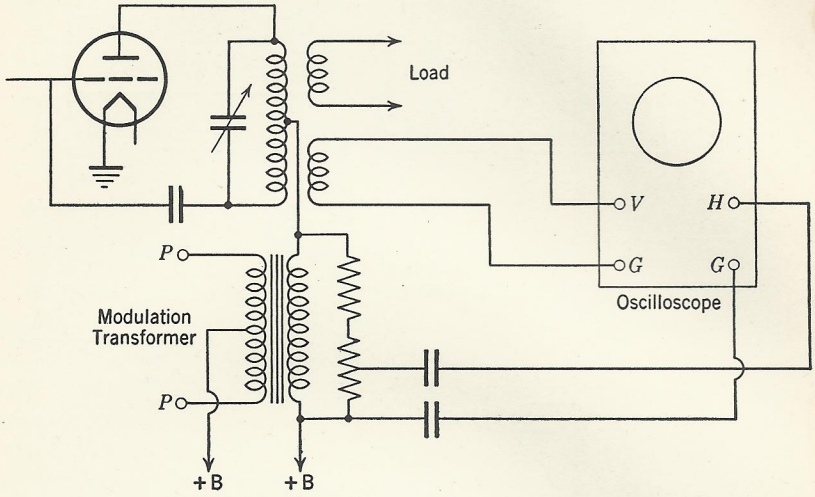

FIG. 22–5. Connections for modulation measurement by trapezoidal pattern.

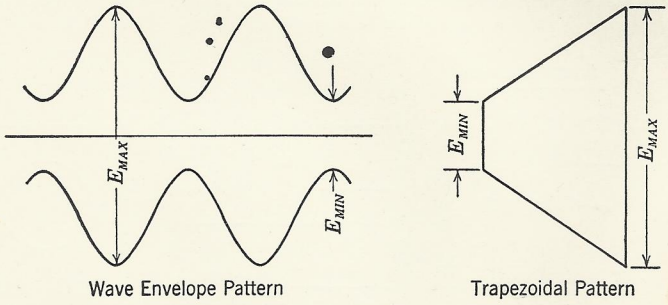

$$\text{Percentage of Modulation} = \frac{E_{MAX} - E_{MIN}}{E_{MAX} + E_{MIN}} \times 100$$

FIG. 22–6. Calculation of percentage modulation from cathode-ray oscilloscope patterns.

direct-current plate volts by direct-current plate current) under normal operating conditions when the amplifier is supplying power to the dummy antenna or load resistor. This impedance must be determined so that the proper load can be arranged for the modulator. Be sure that the amplifier is properly tuned and has good excitation applied to the grid as evidenced by normal grid current.

2. Using the value of load impedance for the modulator as found in Experiment 20 or from a tube handbook, arrange the modulation transformer so that the class C amplifier will present the correct load impedance to the modulator. The required turns ratio, N, primary to secondary, is

$$N = \sqrt{\frac{Z_p}{Z_m}}$$

where Z_p is plate-to-plate impedance of modulator and Z_m is impedance of class C amplifier.

Connect the modulator to modulate the class C amplifier as in Fig. 22–3 and an oscilloscope to measure percentage modulation. Use a few volts of 60-cycle alternating current as input to the modulator. Note how the class C radiofrequency load current and direct-current plate current change with modulation.

3. Using several values of percentage modulation, compare the measurements made by the trapezoidal and wave envelope methods.

4. Adjust the audio input to modulate exactly 100 per cent. Measure the voltage across the secondary or output winding of the modulation transformer and compare the maximum peak value of this voltage with the direct-current plate voltage of the class C amplifier.

5. Repeat part 4 for five or six lower values of modulation percentage. Plot a curve of percentage modulation against alternating-current modulation voltage.

Experiment 23

DETECTORS

Modulation, studied in the previous experiment, is the process of transmitting intelligence by changing the radio frequency carrier in some manner at the modulation or audiofrequency rate. In an amplitude modulation system, modulation is accomplished by varying the amplitude of the radiofrequency carrier to mould it according to the shape of the audiofrequency.

Detection is *demodulation* or the converting of the modulated radiofrequency wave into the original audiofrequency waveform so it may be applied to a loud speaker or other electroacoustic converter and made to reproduce the transmitted sound.

An ideal detector reproduces in its output the exact waveform of the original modulating voltage. If the waveform is not exactly the same, distortion is said to result. Distortion may be due to nonlinearity in some part of the system, in which case it is called amplitude

distortion. Other forms of distortion are frequency distortion, wherein different frequencies are reproduced differently, and phase distortion, wherein a phase displacement at some frequencies is different than at others.

Detection is accomplished by the use of a rectifier that will operate at radiofrequencies. The average value of the rectified direct current will follow the waveform of the modulating voltage. A filter circuit follows the rectifier, filtering out the radiofrequency and leaving only a direct-current component, which varies with the modulation. This direct current may be applied to the primary of a transformer, and an alternating-current voltage will be induced in the secondary owing to the changing direct current in the primary that under proper conditions will be a faithful reproduction of the original audiofrequency.

Vacuum tubes are most often used as rectifiers in detection. Certain minerals or " crystals," such as galena and silicon, possess the ability to pass more current in one direction than in the other and may be used as rectifiers. Today we are finding important applications for crystal detectors in microwave radio reception and measurement circuits.

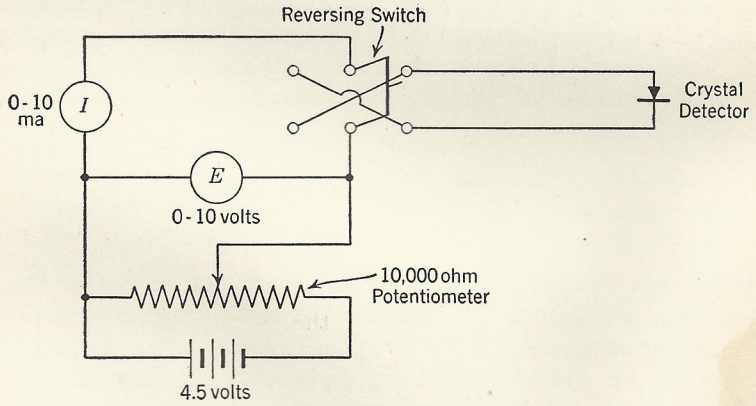

FIG. 23–1. Determination of crystal detector direct-current characteristics.

Experimental Procedure

1. Determine the rectifying characteristics of a crystal detector. Use the circuit of Fig. 23–1 with a crystal detector. Apply about one-half volt as read by voltmeter E and adjust the crystal to secure a " sensitive point " where the current through the crystal is five to ten times greater in one direction than in the other, indicating good rectifying action. Apply voltages from zero to 1 volt in both positive

and negative directions, using the reversing switch S, and read the current through the crystal detector. It will be necessary to readjust the potentiometer for each direction of the reversing switch. Obtain currents for eight or ten values of voltage and plot a curve of current against voltage, applied both positively and negatively. Plot positive current (most favorable direction) above the abscissa or horizontal axis and negative current below the abscissa.

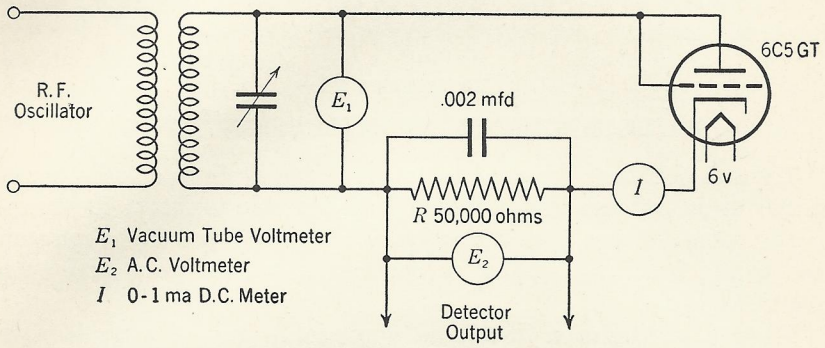

FIG. 23–2. Diode detector.

2. Using an audio oscillator, apply the alternating-current output at about 1000 cycles to the crystal detector with a direct-current milliammeter in series. Obtain a sensitive point on the crystal and apply varying voltages, noting the rectified direct current through the crystal. Plot a curve showing the relation between applied voltage and rectified current. Note what happens to the direct current when the crystal is short-circuited.

3. Diode detector characteristic. Fig. 23–2 shows a circuit that may be used to measure the detector action of a vacuum-tube diode rectifier. R is the load resistor across which the audio voltage is developed. The 0.002 microfarad condenser across this resistor forms the filter circuit which removes the radiofrequency voltage and permits only audiofrequency variations to occur in the resistor.

With this circuit use a vacuum-tube voltmeter to read the voltage developed across the resonant input circuit indicated as E_1. Vary the coupling to the radiofrequency oscillator and read the voltage E_1 and current in the diode circuit I. Plot this relationship as a curve.

Repeat with R 250,000 ohms and note the change in shape of the curve.

4. Apply 60-cycle modulation to the radiofrequency generator or oscillator with the same circuit as used in part 3. Use an oscilloscope

to determine the percentage of modulation in the manner described in Experiment 22. Read the voltage appearing across R with an alternating-current voltmeter and show how this voltage varies with percentage modulation for a constant radiofrequency input voltage E_1.

A radiofrequency oscillator or generator may be plate-modulated by applying an alternating-current voltage from a power transformer in series with the direct-current plate power supply. The equipment of Experiment 22 may also be used as the source of modulated radiofrequency power.

Experiment 24

RADIOFREQUENCY TRANSMISSION LINES

Transmission lines are used to transmit energy from a radio transmitter to an antenna system, when it is desirable to locate the transmitter some distance from the antenna. Several types are in common use today, including coaxial or concentric, twisted pair, and open multiwire types.

When a transmission line is an appreciable part of a wavelength long it is desirable to match the load impedance to the impedance of the line to avoid standing waves on the line and thus to reduce the power loss in the line and to eliminate, as much as possible, radiation from the line.

When a transmission line is terminated with a resistance of such a value that the energy transmitted along the line is absorbed by the resistance and none of it is reflected back along the line to cause standing waves, the value of resistance is called the *characteristic resistance* or impedance. It can be calculated from a knowledge of the electrical constants of the line.

$$\text{Characteristic impedance} = Z_o = \sqrt{\frac{L}{C}} \qquad (1)$$

where L and C are the inductance and capacitance of the line per unit of length.

The characteristic impedance of a transmission line may be measured by determining the reactance of a transmission line at the input terminal with the far end short-circuited and the reactance when the far end is open:

$$Z_o = \sqrt{X_{oc} X_{sc}} \qquad (2)$$

where X_{oc} = open-circuited reactance and X_{sc} = short-circuited reactance.

Coaxial transmission lines have a characteristic impedance of 50 to 150 ohms in most cases whereas open-wire lines range from 300 to 600 ohms usually. Twisted-pair lines are about the same as coaxial lines.

Experimental Procedure

1. Determine the characteristic impedance of any available transmission line such as a twisted pair, coaxial, or parallel-wire line. Any length line may be used, preferably more than one-tenth wavelength long but not exactly one-quarter wavelength. Measure the open- and short-circuited impedance and calculate the characteristic impedance by Eq. 2 above.

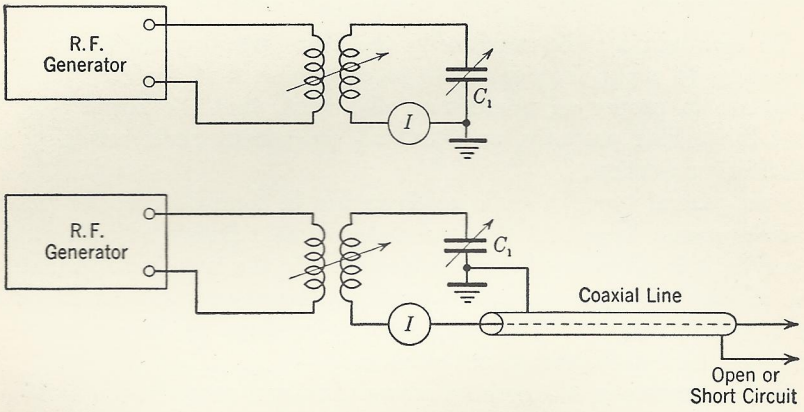

FIG. 24–1. Measurement of reactance of a transmission line. Any type of line may be used.

The open-circuit reactance can be determined by connecting the line in series with C_1 as in Fig. 24–1, with the remote end of the line open, and noting the change in capacity of C_1 with and without the line in circuit for resonance. The change in reactance of C_1 equals the open-circuit reactance of the line.

The short-circuited reactance may be determined in a similar way with the remote end of the line short-circuited.

2. Connect a terminating resistance across the remote end of the line equal to the characteristic impedance of the line. Connect a thermomilliammeter in series with this terminating resistor and also in series with the input of the line as in the circuit of Fig. 24–1. Adjust C_1 for maximum current at the input end of the line. Note the currents and calculate the amount of power dissipated in the terminating resistor.

3. Remove the line as used in part 2, connect the terminating resistance in place of the line, and note the current through the resistance for the same setting of C_1. Compare the power in the resistor with that obtained in part 2. Adjust C_1 and note if the capacitance is different from that in part 2 for maximum current.

4. Connect the line and terminating resistor as in part 2. Vary the value of the terminating resistor and note the current at both ends of the transmission line. Obtain data and plot a curve of the ratio of the two line currents against the value of the terminating resistance.

Experiment 25

ANALYSIS AND ADJUSTMENT OF RADIO RECEIVER

To maintain a radio receiver in the best operating condition it is necessary to make frequent tests to determine that the receiver circuits are in proper adjustment or alignment, that the power supply unit is working properly, and that all component parts are in good operating condition.

Two general types of radio receivers are in common use, the tuned radiofrequency type and the superheterodyne. Before adjusting any receiver, it is necessary to determine not only the type but to identify the various principal component parts so that adjustment can proceed in a logical manner. This may usually be done by inspection if a complete circuit diagram is not available.

If the receiver is a superheterodyne the usual procedure is to align or tune the intermediate-frequency amplifier. This may be done by applying to the grid of the first detector or converter tube the output of a modulated test oscillator or signal generator at the proper frequency and adjusting all tuning condensers on the intermediate-frequency transformers for maximum output signal. The use of an output meter is essential to secure accurate adjustment, and the output of the modulated test oscillator should be as low as possible to reduce action of the automatic volume-control circuit. A copper-oxide alternating-current voltmeter connected across the output transformer plate winding may be used as an output meter. The intermediate-frequency amplifier should be tuned to the frequency specified by the manufacturer of the receiver, usually 456 kilocycles.

When the intermediate-frequency amplifier is properly tuned the radiofrequency and oscillator tuning circuits may be adjusted. Connect the modulated oscillator output to the antenna and ground terminals of the receiver and adjust the tuning of both receiver and oscillator to a frequency near the high-frequency end of the receiver

tuning range, usually 1400 kilocycles for a broadcast receiver. Tune the receiver by adjusting the small trimmer condensers on the side of the ganged tuning condenser to secure maximum output from the receiver. The tracking of the oscillator and radiofrequency stages of the receiver may be checked by adjusting the test oscillator to a frequency near the low-frequency end of the receiver dial and noting if the receiver responds at the proper dial setting. If it does not or if the output is very low, it is necessary to adjust the oscillator padding condenser or oscillator inductance to make the receiver respond at the proper dial setting. When such changes are made it is desirable to readjust the high-frequency end trimmer condenser tuning again and make a second check at the low-frequency end, particularly if the padding condenser or oscillator inductance has been changed substantially.

Tuned radiofrequency receivers are usually aligned by adjusting the small trimmer condensers at the high-frequency end of the dial for maximum output just as with the superheterodyne type. At the low-frequency end of the tuning range the tuning inductance may be changed or the slotted end plates of the tuning condensers may be bent to secure maximum output.

All tubes in a receiver should be checked to determine their condition. Tube-testing equipment can determine the emission of tubes under standard test conditions that compare the tube under test with normal tube characteristics. Tube checkers are also available that make a check of the mutual conductance factor, leakage resistance, and short circuits between elements.

Experimental Procedure

1. Test all tubes in the receiver. Read instructions for operation of the tube tester before proceeding.

2. Align the intermediate-frequency amplifier by applying the correct intermediate frequency from a modulated oscillator to the grid of the converter and tuning the intermediate-frequency transformers. Use as low an output voltage from the modulated oscillator as possible and connect an alternating-current voltmeter to the output transformer primary as an output meter to aid in securing accurate alignment. A 2-microfarad condenser in series with the alternating-current voltmeter will permit the meter to read only alternating-current voltages and should be used if a direct-current voltage exists across the transformer primary also.

3. Determine the relative sensitivity of the receiver at several fre-

quencies throughout the entire tuning range of the receiver. If a considerable difference exists in the sensitivity at different ends of the dial or if the receiver does not respond to signals at the proper dial setting, align the tracking as outlined above by adjustment of the trimmer condensers and oscillator padding condenser or oscillator inductance.

4. Measure direct-current voltages at
   (*a*) Output of rectifier (ahead of filter),
   (*b*) Plate of output audio-amplifier tube,
   (*c*) Screen of output audio-amplifier tube if this tube is a beam or pentode type,
   (*d*) Grid voltage of output tube,
   (*e*) Plate and screen volts of radiofrequency and intermediate-frequency amplifiers.

Experiment 26

HIGH-FREQUENCY RESISTANCE MEASUREMENT

The resistance of lines, coils, and circuits is usually quite different at high frequencies than at low frequencies or with direct current. This is due to the skin effect and other factors that play an important part in the conduction of currents at high frequencies.

Several methods may be employed in the measurement of resistance at high frequencies. Under proper conditions the bridge, resistance variation, reactance variation, and substitution methods will all give accurate measurements.

The bridge method is similar to the usual Wheatstone bridge method, but it requires circuit elements accurately calibrated for the high frequency in use, and containing negligible reactance.

The resistance-variation or the reactance-variation methods consist in inserting a known value of resistance or reactance in series with the unknown and noting the current in the circuit both with and without the added resistance or reactance. When the voltage applied to the circuit remains constant the value of the unknown resistance R_x can be calculated:

$$E = I_1 R_x = I_2(R_x + R_1)$$

$$R_x(I_1 - I_2) = I_2 R_1$$

$$R_x = \frac{I_2}{I_1 - I_2} R_1$$

When the added resistance is equal to the unknown resistance

$$R_x = R_1$$

$$\frac{I_2}{I_1 - I_2} = 1 \quad \text{and} \quad I_1 = 2I_2$$

Thus when the current is reduced to one-half of the original value by inserting additional resistance the added resistance is equal to the unknown. It is important that the voltage applied to the circuit be the same before and after the resistance is added. This often limits the accuracy of this method in practical situations.

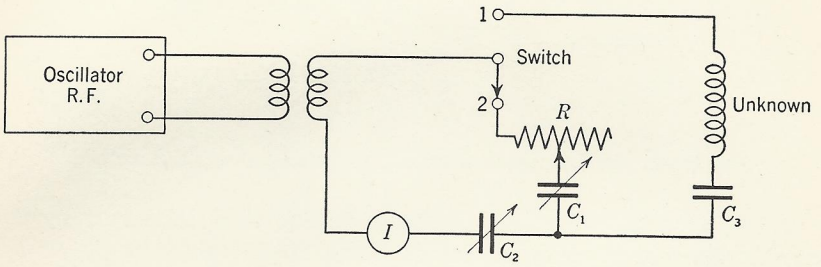

FIG. 26–1. Resistance measurement by substitution method.

The substitution method consists in substituting a known resistance and reactance for the unknown in a resonant circuit as in Fig. 26–1 and obtaining the same circuit conditions and current. Then the unknown resistance is equal to the known substitution resistance. The circuit must be tuned to resonance in each case, using a low-loss condenser in series with the unknown, C_3 in Fig. 26–1, when the unknown contains inductive reactance. The substitution condenser C_1 must also have negligible resistance.

Experimental Procedure

1. Measure the resistance of an inductance coil, using the resistance-variation method. Use the circuit of Fig. 26–2 with the resistance box R set at zero and the coil being measured *loosely coupled* to the oscillator at 1000 kilocycles or some convenient frequency. Tune the circuit to resonance by adjusting C_1. Adjust the coupling to give a convenient current reading on the thermomilliammeter. Then insert resistance in the resistance box until the current drops to one-half the previous value, being careful not to change the coupling. The value of resistance is then equal to the value of the resistance of the coil

plus the meter. The meter resistance is usually marked on the meter scale so the coil resistance may be determined. Accuracy will be improved by using very loose coupling to a high-power oscillator or radiofrequency generator to insure that the voltage induced in the inductance will be the same under both circuit conditions. Note the capacity of C_1 at resonance for use in part 4.

If a resistance box is not available insert any value of resistance for R and note the current obtained and calculate the unknown resistance as explained above.

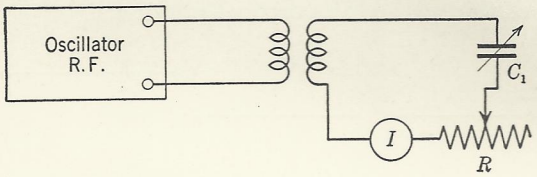

FIG. 26–2. Resistance measurement by resistance variation method.

2. Measure the resistance of the same coil used in part 1 by the *substitution method*, using the circuit of Fig. 26–1.

(*a*) Throw the switch to position 1 and tune to resonance with C_2, noting current.

(*b*) Insert 50 ohms in R and throw the switch to position 2, tuning to resonance with C_1, not changing C_2. Adjust R to obtain the same current as with switch in position 1. Repeat the above procedure several times to tune the circuits to resonance accurately and get exactly the same currents. The resistance R is then equal to the resistance of the unknown coil. Note that it is not necessary to subtract the resistance of the meter in this method.

3. Using the substitution method as in part 2, measure the resistance of the coil over as wide a range of frequency as possible. Plot a curve to show how the resistance of the coil varies with frequency.

4. Using the value of C_1 obtained for resonance in part 1, calculate the inductive reactance of the coil. Neglecting the distributed capacity of the coil

$$L = \frac{\mathrm{I}}{(2\pi)^2 f^2 C}$$

$$X_L = 2\pi f L$$

Using the value of resistance obtained in part 3, calculate the Q of the coil.

$$Q = \frac{X_L}{R}$$

Plot a curve showing how Q varies with frequency.

Experiment 27

ULTRA-HIGH-FREQUENCY TRANSMISSION LINES

A radiofrequency transmission line may be used as a resonant circuit and tuned to the desired frequency by adjusting its length. At ultra-high frequencies such a line is physically short because the wavelength is low, being approximately one-half wavelength long. A knowledge of the current and voltage distribution along a resonant line is necessary to make effective use of such a line. This may be studied in the laboratory conveniently at ultra-high frequencies.

When a radiofrequency voltage is applied to a transmission line a voltage wave travels along the line. If the line is more than one wavelength long a complete wave of voltage exists along the line.

This voltage wave may be reflected from the end of the transmission line if a suitable terminating resistor or load is *not* connected to the end of the line. This reflected wave combines with the initial wave at every point along the line, and the instantaneous voltage is the algebraic sum of the two voltages. Only when a terminating resistor or load equal to the *characteristic impedance* is connected to the end of the line is all of the initial wave absorbed.

When some reflection occurs the reflected wave combined with the initial wave creates a standing wave that may be measured with a meter along the line. When no reflection occurs and the line has negligible loss resistance the voltage or current is the same at all points along the line as read by a meter, since the meter reads the effective value of the radiofrequency voltage passing along the line and not the instantaneous value. Where considerable loss is present the current and voltage gradually drop in value.

On resonant transmission lines where standing waves exist the wavelength of the radiofrequency voltage may be determined, being twice the distance between two current or voltage maxima. Thus a transmission line may be used to determine wavelength or frequency.

When the wavelength is known the frequency may be calculated if the speed or velocity of the wave travel is known. In space this velocity is 300,000,000 meters per second and this value is approached on an open-wire radio transmission line.

Experimental Procedure

An ultra-high-frequency oscillator that operates at any convenient frequency may be used as the source of power for the measurements that follow. A line type oscillator is shown in Fig. 27–1. Conventional oscillators may be used if sufficient space is available to set up a two-wire line two wavelengths or more long.

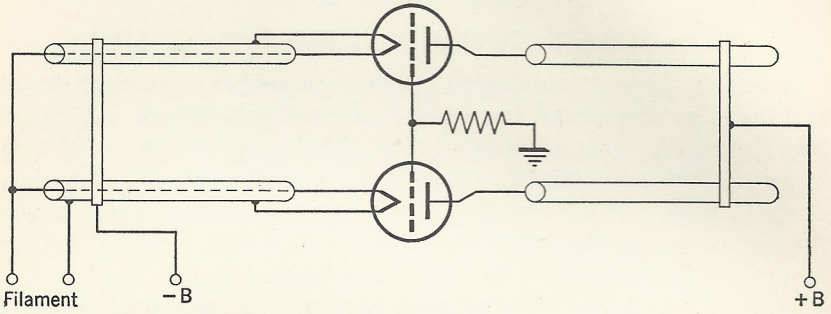

Fig. 27–1. Ultra-high-frequency line oscillator.

The resonant line type oscillator of Fig. 27–1 is coupled to a line by placing the shorted input end of the line near the plate line of the oscillator, forming inductive coupling between the two circuits. A one- or two-turn coil of small diameter connected to the input end of the line may be used to couple the line to the conventional type of oscillator where a resonant line plate circuit is not used.

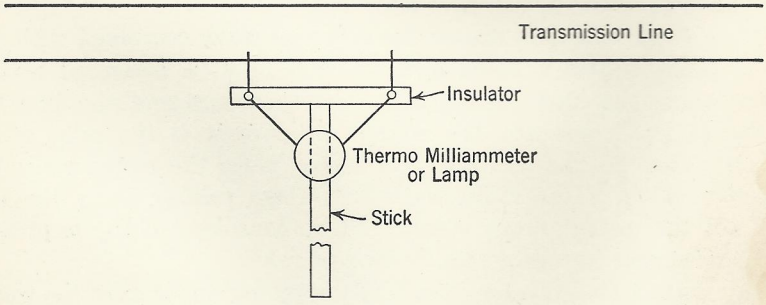

Fig. 27–2. Method of measurement of line current.

Current along an open-wire transmission line may be measured by a meter connected as shown in Fig. 27–2. The meter must be a sensitive thermomilliammeter.

If a thermomilliammeter is not available, excellent results may be obtained in measuring current by using a small flashlight or pilot lamp

in place of the meter and comparing the light from this lamp with that from a similar lamp operated on direct current. When the illumination of both lamps is the same the currents are the same.

Voltage maxima or minima along an open-wire line may be observed by the use of a small neon lamp connected at the center of a shorting bar which may be slid along the line as desired. Mounting the lamp and shorting bar on a long stick avoids bringing one's hands near or in contact with the line and thus disturbing the operating conditions.

1. Determine the frequency of the ultra-high-frequency oscillator by observing the distance between current maxima along the line with the far end of the line open. Repeat from a measurement of the voltage maxima as read by a neon lamp connected across the line. Calculate the frequency.

2. Measure the current along the line with the far end open, for a distance of at least one wavelength, recording the distance along the line at which the current is observed. Obtain enough points to plot a curve showing how the current varies along the line.

Compare this with a sine wave calculated for the same wavelength and amplitude.

3. Repeat part 2 with the far end of the line short-circuited.

4. Terminate the line with a resistance equal to Z_o, the characteristic impedance of the line. This may be calculated from

$$Z_o = 276 \log_{10} \left(\frac{2a}{b} \right)$$

where Z_o is impedance in ohms,

a is the spacing in inches between wires, center-to-center,

b is the diameter of the wire in inches.

Measure the current and voltage along the line under this condition.

Experiment 28

SELECTIVITY AND AUTOMATIC VOLUME-CONTROL CHARACTERISTICS OF RADIO RECEIVERS

Selectivity is the ability of a radio receiver to "tune out" or discriminate against signals of frequencies differing from the frequency of the desired signal. Good selectivity is said to exist when it is possible to eliminate an unwanted signal a few kilocycles away from the desired signal. Extreme selectivity is desirable from the standpoint of eliminating interference but is undesirable in that it cuts off reception of the higher modulation frequencies.

The degree or amount of selectivity existing in any radio receiver is determined largely by the number and quality of tuned circuits incorporated within the receiver. The selectivity of a tuned radiofrequency receiver is determined only by the number and quality of the signal frequency tuned circuits whereas the selectivity of a superheterodyne receiver is determined largely by the tuned circuits in the intermediate frequency amplifier.

Selectivity is expressed as a ratio. It is the ratio of the voltage input off resonance to the voltage input required at resonance to produce the same output signal.

$$\text{Selectivity} = \frac{\text{Voltage input off resonance}}{\text{Voltage at resonance}}, \text{ for constant output}$$

This ratio will vary depending upon how far off resonance the comparison is made and must be determined experimentally at a number of frequencies both above and below resonance and plotted as a curve to provide complete information about any receiver.

Automatic volume control (A.V.C.) is secured by applying the detector rectified direct-current voltage (produced by the carrier of the station being received) to the grids of the radiofrequency and intermediate-frequency amplifier tubes. When a strong signal is received a higher voltage is developed across the detector load resistor. This in turn, when applied to the amplifier as a negative bias, reduces the amplification and thus provides an automatic volume control.

Experimental Procedure

1. Measure the selectivity of a receiver. Use a load resistor in place of the loud speaker or output transformer on the receiver to be measured and connect an alternating-current voltmeter across this resistor to determine output voltage produced by a modulated input signal to the antenna-ground terminals of the receiver. Tune the receiver accurately to the signal frequency. Disconnect the automatic volume-control circuit of the receiver.

Apply a voltage from the signal generator with constant percentage modulation, about 40 per cent, and determine the input voltage required to produce a relatively low power output into the load resistor, about 50 milliwatts. Vary the frequency of the signal applied *without changing the tuning of the radio receiver*, and obtain at ten or more frequencies the input signal voltage required to produce the same output as obtained above when the receiver was tuned to the signal frequency.

Obtain data thus to plot a selectivity curve, using a logarithmic scale

for the selectivity ratio as ordinate and an equal division scale for frequency as abscissa.

2. Measure the automatic volume-control action of the receiver. Reconnect the automatic volume-control circuit. Tune the receiver accurately to the frequency of the signal generator. Using a constant percentage of modulation, about 40 per cent, apply a wide range of input voltage to the receiver and measure the audio output voltage across the load resistor.

Plot a curve of audio output voltage against input voltage to show the effect of the automatic volume control.

3. Repeat part 2, using a different type receiver (tuned radiofrequency or superheterodyne).

Experiment 29

THE COMMUNICATIONS TYPE OF RADIO RECEIVER

A communications type of receiver is a receiver designed for use in the reception of both radiotelegraph and radiotelephone signals under many operating conditions. It has many controls and adjustments not found on the standard broadcast receiver to permit reception under difficult conditions in the hands of an experienced operator.

The reception of continuous wave radiotelegraph signals requires the use of a heterodyne or beat oscillator to produce an audible signal. An oscillator operating near the intermediate frequency of the receiver is used to produce a beat note with the converted signal passing through the intermediate-frequency amplifier. This oscillator is usually variable over a few kilocycles, so the beat note may be adjusted to the desired frequency by the operator. It is loosely coupled to the second detector.

Separate gain controls are provided on the communications type of receivers for both the audiofrequency amplifier and the radiofrequency stages. By adjusting the radiofrequency gain control the maximum gain can be set and the automatic volume control permitted to control the gain up and down below this maximum, the audiofrequency control then being used to obtain the desired output signal. When automatic volume control is not desired the automatic volume control voltage is removed from the radiofrequency stages by a switch and the gain is controlled manually by operating the radiofrequency gain control knob. Under this latter operating condition it is usually desirable to set the audio volume control at maximum.

The procedure followed in the reception of radiotelephone signals is: (1) Turn on the automatic volume control, (2) set radiofrequency

gain control at maximum, (3) regulate output volume by adjusting the audio frequency gain control, (4) adjust variable selectivity control to admit widest possible band without interference.

In the reception of radiotelephone signals under conditions where severe noise or static exists, the radiofrequency gain control may be set at a point just high enough to produce sufficient gain for the required output from the weakest signal it is desired to receive. During periods when the transmitted carrier is off this method of operation will reduce the level of the noise being received.

To receive radiotelegraph signals the normal procedure is: (1) Turn off the automatic volume control, (2) turn on beat oscillator, (3) advance audio gain control to maximum, (4) control volume output by adjusting radiofrequency gain control, (5) adjust variable selectivity control to eliminate interference if necessary.

Other adjustments and operating conveniences, often provided on the communications type of receivers include noise silencers, signal-strength meters or indicators, and variable selectivity crystal and band pass filters. A bridge circuit is included on some receivers to balance out an undesired audio heterodyne squeal. An intimate knowledge of the many adjustments and operating conditions is important and when properly used makes possible satisfactory reception under extremely unfavorable conditions.

It is customary to estimate received signal strength on an arbitrary *R* scale of one to nine. *R*9 indicates an extremely strong signal and *R*1 a very weak signal, just recognizable. Intermediate strengths are estimated between *R*1 and *R*9. A meter is included on many receivers calibrated in *R* units and *DB* to assist in making an estimate of received signal strength. No standard exists at present, and different manufacturers calibrate such meters in different ways.

The readability of a signal is often not related to signal strength because of competing noise or interference. A similar readability scale of one to five is sometimes also used, *QSA*5 meaning a perfectly readable signal and *QSA*1 being a signal readable with difficulty only part of the time. *QSA* is the international abbreviation for readability.

Experimental Procedure

1. Make a list of all control knobs on the receiver used and determine the effect of each knob control. Operate the receiver and become familiar with each adjustment.

2. With the receiver adjusted for reception of a modulated or radiotelephone signal, the automatic volume control operating, apply known

voltages from a signal generator and calibrate the signal strength or *R* meter. Plot a curve of input volts on a horizontal logarithmic scale against *R* meter readings. Note the signal strength necessary for reception under various conditions by tuning in different stations.

3. Tune in the Bureau of Standards standard frequency transmissions of 5000 kilocycles and check the frequency calibration of the receiver dial. Note the operation of the band spread dial if the receiver is equipped with such a control.

4. Adjust the receiver for reception of unmodulated- or continuous-wave telegraph signals and tune in such a signal. Connect the crystal filter in circuit to obtain maximum selectivity and note operation.

5. As time permits, tune in other stations and note relative signal strength and type of modulation. Locate the frequencies used by the various services other than standard broadcasting, such as police, aviation, and international broadcasting.

Experiment 30

FREQUENCY MEASUREMENT

It is frequently necessary to measure the frequency of a radio transmitting station to determine that it will not interfere with other stations and assure its operating on the assigned frequency. With an ever-expanding need for a larger number of stations, frequency measurements must be made with a high degree of accuracy so that stations will occupy the smallest possible channel width.

The measurement of frequency, which is the determination of the number of cycles per second of an alternating-current wave, can be made with an accuracy approaching that in measuring time. Tolerances of less than 0.04 per cent are required of all radio stations by the Federal Communications Commission, with each radio broadcasting station required to hold its frequency within 20 cycles of the assigned frequency.

Measurement of frequency in this country can be accomplished without great difficulty by comparison with the standard frequency transmissions of the Bureau of Standards from Station WWV in Washington, D. C. This station transmits continuously on a frequency of 5000 kilocycles and on other frequencies on regular schedule, with an accuracy better than one part in ten million. The usual procedure in measuring an unknown frequency is to adjust the frequency of a 100 kilocycle oscillator so that the 50th harmonic (5000 kilocycles) is the same as that of WWV by observing beats between the two signals on a radio receiver and adjusting to zero beat. Other harmonics of the

100-kilocycle oscillator will then be available for comparison with signals that it is desired to measure. A 10-kilocycle multivibrator may also be employed to secure 10-kilocycle calibration points of high accuracy. A multivibrator is a kind of oscillator whose frequency can be controlled by another source of energy such as the 100-kilocycle oscillator, providing 10-kilocycle separation between signals known to be as accurate in frequency as the 100-kilocycle oscillator.

Experimental Procedure

1. Tune in WWV on 5000 kilocycles and zero beat a 100-kilocycle oscillator with WWV.

2. Check operation of the multivibrator unit to see that it is producing signals 10 kilocycles apart. Do this by locating two dial settings on a receiver 100 kilocycles apart with the 100-kilocycle oscillator only in operation. Then switch in the 10-kilocycle multivibrator and count the number of signals between the two 100-kilocycle points and adjust the multivibrator until it provides signals exactly 10 kilocycles apart.

3. Measure the frequency of a crystal oscillator by comparing its frequency with that of the 10-kilocycle multivibrator unit harmonics. Determine the beat frequency between the crystal oscillator and the nearest 10-kilocycle known frequency. Use a calibrated audio oscillator to determine the beat frequency by comparison.

As time permits, measure the frequencies of distant stations on both broadcast and high-frequency channels.

Experiment 31

MEASUREMENT OF INDUCTANCE AND CAPACITANCE

Accurate measurement of inductance and capacitance is often necessary to determine the operating characteristics of a radio circuit. At high frequencies a few microhenries inductance or a few micromicrofarads capacitance may be an important factor in the behavior of a circuit. As the frequency increases, it is of increasing importance to know accurately the inductance of connecting leads as well as inductance coils and the distributed capacity of wiring or coils.

The inductance of an air-core coil does not vary appreciably with frequency; hence the inductance of a coil may be determined at low frequencies. Similarly the capacity of a condenser does not change with frequency, so that capacity can also be measured at low frequencies. Low-frequency measurements may be made by the bridge method,

providing extremely good accuracy as compared with high-frequency methods.

Low-frequency bridges are similar to the direct-current Wheatstone bridge of Experiment 2. It is necessary to balance the bridge for both reactance and resistance to secure satisfactory measurements. The resistance R_s in series with the standard inductance L_s as shown in Fig. 31–1 being adjusted to secure balance is indicated by minimum signal in the headphones. Any source of alternating current may be used, an audio oscillator operating at about 1000 cycles producing a tone that may be heard distinctly in the headphone null indicator. To secure extremely accurate balances, an audio amplifier may be used between the bridge and the headphones.

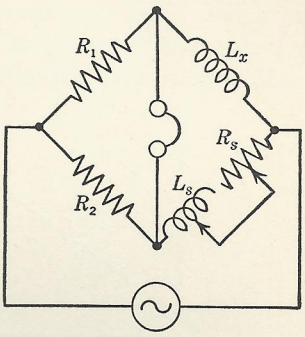

FIG. 31–1. Low-frequency alternating-current bridge measurement of inductance.

Measurement of inductance or capacitance may be made at high frequencies when a suitable standard is available and the frequency is accurately known. The frequency of resonance can be determined, and if either the inductance or capacitance of the circuit is known the other can be calculated from the resonant circuit equation:

$$\text{Frequency} = \frac{1}{2\pi\sqrt{LC}} \quad \text{or} \quad L = \frac{1}{(2\pi)^2 f^2 C} \quad \text{or} \quad C = \frac{1}{(2\pi)^2 f^2 L}$$

where L is inductance in henries, C is capacitance in farads, and f is the frequency in cycles per second.

Small values of capacitance may be accurately measured by placing them in parallel with a known standard variable condenser and noting the capacitance change in the standard condenser when retuning to resonance.

At high frequencies the distributed capacitance of an inductance coil may be of considerable importance. This is the turn-to-turn capacitance plus the capacitance between the coil terminals or connecting wires. Such a capacitance will cause the coil to be resonant at a definite frequency, sometimes called the self-resonant frequency of the coil.

The distributed capacitance of a coil will cause the total reactance of the coil to vary with frequency at high frequencies, making it seem that the inductance of the coil changes with frequency. This apparent

inductance of the coil, L_a, is

$$L_a = \frac{L}{(1 - \omega^2 L C_o)}$$

where L is the true inductance, $\omega = 2\pi f$, and C_o is the distributed capacity. The frequency at which $(1 - \omega^2 LC_o)$ equals zero is the self-resonant frequency of the coil.

The distributed capacitance of an inductance coil may be measured by using the coil in a resonant circuit with a parallel capacitance of known and variable value. The capacitance required to tune to resonance at several frequencies is determined, and the corresponding wavelength squared is plotted as a curve against the capacitance of the condenser. The resultant points will lie in a straight line, with the distributed capacitance of the coil intercepting the capacitance axis as a negative capacity, C_d being the distributed capacitance as shown in Fig. 31–2.

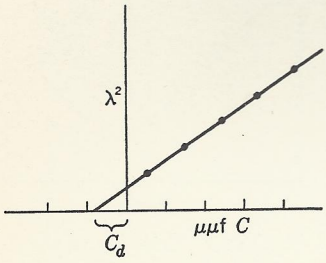

FIG. 31–2. Measurement of distributed capacity of a coil.

Small values of distributed capacitance are difficult to measure unless both capacitance and frequency or wavelength are known accurately. In such cases, measurements made with a small value of known capacitance tuning the coil and a corresponding high frequency, will give improved accuracy.

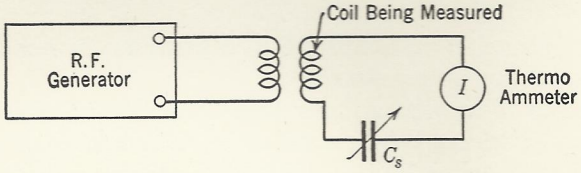

FIG. 31–3. Measurement of inductance and distributed capacitance of an inductance coil.

Experimental Procedure

1. Calibrate a variable condenser on the low-frequency bridge. Determine the capacitance at ten or more well-spaced points on the dial and plot a calibration curve of the condenser.

2. Measure the inductance of a coil by determining the capacitance necessary to resonate at some convenient high frequency. Calculate the inductance of the coil. Use the calibrated condenser of part 1. Use the circuit of Fig. 31–3.

3. To measure the distributed capacitance of a coil, use the same circuit, Fig. 31–3, and determine the capacitance for resonance at five or six different frequencies well spaced over the condenser dial, determining the frequency accurately with a wavemeter or frequency meter.

Plot a curve of wavelength squared against capacitance in micro-microfarads and determine the distributed capacitance of the coil.

Experiment 32

VACUUM-TUBE VOLTMETER

The vacuum-tube voltmeter is an important instrument often used in making high-frequency radio measurements. It will give good accuracy and sensitivity over a wide range of frequencies and does not

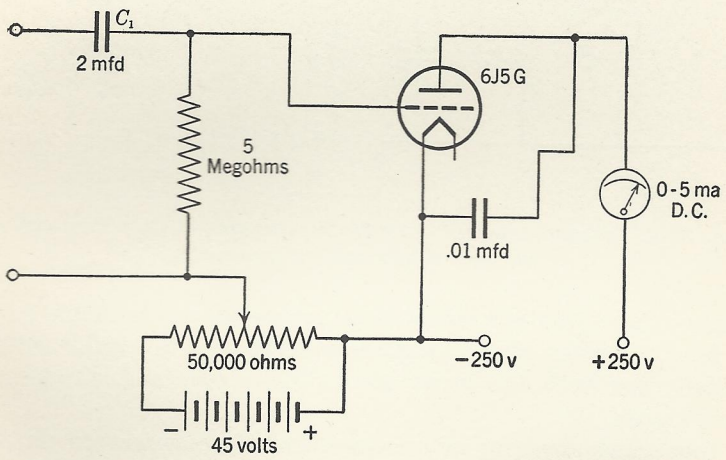

Fig. 32–1. Vacuum-tube voltmeter.

require power from the circuit being measured. This type of voltmeter works equally well at low frequencies and may also be used in making direct-current voltage measurements, providing accurate readings in circuits of low power.

One type of vacuum-tube voltmeter often used is the biased triode, which is suitable for both alternating-current and direct-current measurements, shown in Fig. 32–1. It consists of a triode tube with sufficient negative grid-bias voltage to practically cut off plate current. The application of an alternating-current voltage to the grid circuit will then cause plate current to flow during the portion of the cycle

when the alternating-current voltage opposes the grid-bias voltage, exactly the same as in plate detection circuits. This same type may be used for direct-current measurements by connecting the direct-current voltage to be measured in series with the grid-bias voltage and observing the change in plate current as the total grid-bias voltage changes. In this case the voltage being measured is applied in the proper polarity to decrease the grid-bias voltage and thus causes an increase in plate current. As no current flows in the grid circuit as long as the grid remains negative, no power will be taken from the circuit and the input resistance of the instrument will be infinite.

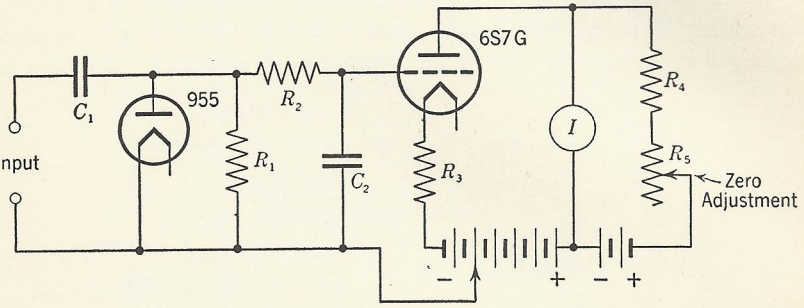

FIG. 32–2. Vacuum-tube voltmeter for measurement of alternating-current voltages at high and low frequencies.

Many other types of vacuum tube voltmeters are available in compact form. Various circuit arrangements are used to provide sufficient sensitivity for both the usual alternating-current and direct-current measurements.

A type much used for alternating-current measurements providing accuracy within a few per cent from 60 cycles to 100 megacycles is shown in Fig. 32–2. The diode rectifier is followed by a direct-current voltage amplifier to amplify the voltage drop in the diode load resistor. Full scale ranges of 3 volts or less are obtained with multipliers to decrease the direct-current amplifier sensitivity to secure higher-scale ranges. The wide useful frequency range is obtained by using one of the small acorn vacuum tubes as the rectifier enclosed within a probe to reduce the capacitance of connecting wires and terminals, the probe being used to make contact at the point where the voltage is to be measured. A type 955 acorn triode used as a diode with the grid connected to the plate, and a high mu triode such as a 6Q7G is used as the direct-current amplifier. This type of voltmeter is the most satisfactory type for high-frequency voltage measurements.

Experimental Procedure

1. Connect the triode vacuum-tube voltmeter circuit shown in Fig. 32–1, using a 0–5 milliampere direct-current milliammeter in the plate circuit of the triode, a 6J5GT vacuum tube.

Adjust the plate current to near cutoff by adjusting the grid-bias voltage applied through the potentiometer. If the current is adjusted to one or two small-scale divisions on the plate milliammeter consistent measurements may be made.

Apply known voltages at 60-cycle frequency to the input terminals of the vacuum-tube voltmeter and calibrate, determining the plate currents for various alternating-current voltages applied. Use an alternating-current voltmeter of the copper-oxide rectifier type to determine the calibrating voltages. Plot a calibration curve of plate currents against applied 60-cycle voltages.

2. Repeat part 1 but using voltages at 1000-kilocycle and 5000-kilocycle frequencies and determine if the instrument calibration is independent of frequency. Plot correction curves if necessary, showing how the plate current deviates from the values observed at 60 cycles. Known voltages at these frequencies may be obtained by measuring the voltage across a known resistance of a few ohms, the current through the resistor being measured by a thermoammeter or other high-frequency ammeter.

3. Using the same circuit, remove the isolating condenser C_1 in the grid circuit, making a direct-current vacuum-tube voltmeter. Apply various known direct-current voltages from a battery or other source and calibrate as a direct-current voltmeter. Be sure that the positive terminal is applied to the grid side of the input circuit so plate current will increase with applied voltage. Adjust the potentiometer as before to give a deflection of one or two divisions on the plate current meter without voltage being applied to the input terminals.

APPENDIX

The foregoing experiments require, with but few exceptions, a modest outlay of laboratory equipment. A variety of meters, resistors, condensers, inductances, vacuum tubes, and small parts is essential, but some items of equipment may be constructed in the laboratory shop if not otherwise available. Several pieces of equipment may be constructed following the circuit diagrams and information presented as a part of the experiments. These include the Wheatstone bridge of Experiment 2, a wavemeter from Experiment 7, a high-voltage power supply unit described in Experiment 13, the radiofrequency oscillator of Experiments 15 and 27, the audio amplifier of Experiment 20, the radiofrequency oscillator and amplifier of Experiment 21, and the vacuum-tube voltmeter of Experiment 32. All these pieces of equipment will prove most convenient if assembled as a unit on a metal chassis or even on a wood board, ready for use with a minimum of time and effort required to place them in operating condition. The assembly, wiring, and testing of such pieces of equipment constitutes an excellent project in itself.

Other items of equipment that may readily be constructed and that are used in the experiments described are indicated in this appendix. The constructor is advised to obtain more detailed constructional information in the references cited before proceeding with the actual construction.

Radiofrequency Oscillator. Fig. 15–1 gives a circuit diagram of a radiofrequency oscillator very often used in a radio laboratory. If such an oscillator were constructed as a unit with a complete power supply built in, it will be most convenient. Plug-in coils may be used to provide output over a wide frequency range. Some means of varying the coupling between the oscillator tank coil and the pickup coil is desirable to provide variable output voltage. The tuning dial can be calibrated as to frequency, and the addition of a regulated power supply[1,2] will provide a constant radiofrequency output voltage independent of line voltage fluctuations.

A simple oscillator of this type does not have good frequency stability as required for some work. A unit constructed as described in Experiment 21 but using a variable-frequency oscillator followed by the class C amplifier as shown in Fig. 21–1 will provide improved frequency stability, and the output frequency will not change with line voltage.

Audiofrequency Oscillator. Fig. 3 shows a circuit diagram of an excellent type of audiofrequency oscillator that may be used for many tests.[2] It

[1] *The Radio Amateur's Handbook*, published by the American Radio Relay League, West Hartford, Conn.

[2] *Radio Handbook*, published by Editors and Engineers, Ltd., Santa Barbara, Calif.

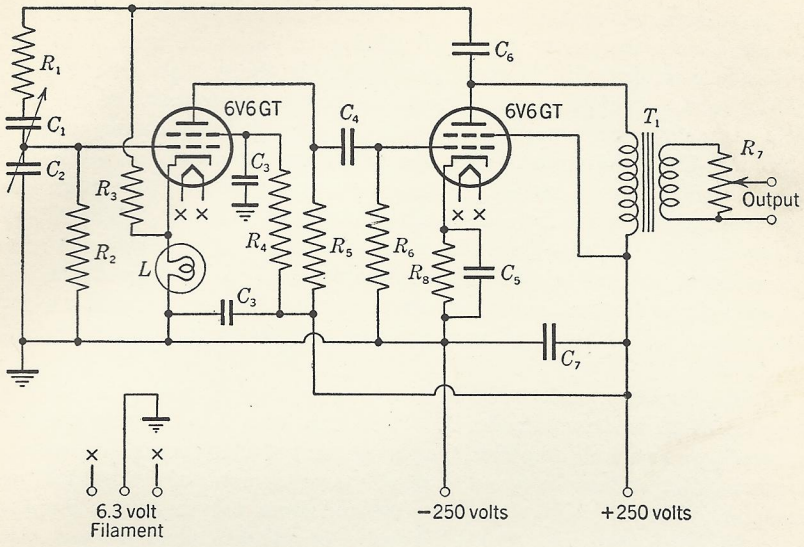

C_1 and C_2 500 mfd ganged variable air cond.
C_3 0.25 mfd
C_4 0.25 mfd
C_5 25 mfd 50 v
C_6 0.5 mfd
C_7 8 mfd 450 v

L Mazda S6 Lamp 6 watts 120 volts
R_1 100,000 ohms ½ watt
R_2 100,000 ohms ½ watt
R_3 2500 ohms ½ watt
R_4 10,000 ohms 10 watts
R_5 5,000 ohms 10 watts

R_6 100,000 ohms ½ watt
T_1 Plate to Line Transformer
R_7 2000 ohm Potentiometer
R_8 400 ohms 10 watts

FIG. 3. Feedback type of audio oscillator.

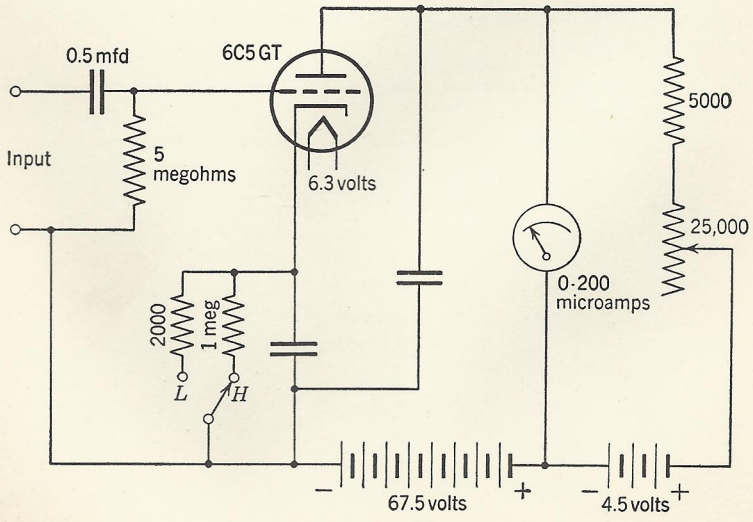

FIG. 4. Vacuum-tube voltmeter. Self-bias type with two ranges.

can be constructed with a two-gang switch to change R_1 and R_2 in steps to provide a wide frequency range. Shielding of the entire unit in a metal cabinet is most desirable to avoid hum pickup in the grid circuit of the first 6V6GT tube. Avoid coupling between the power transformer and the audio output transformer if a power supply unit is assembled in the same cabinet.

Vacuum-Tube Voltmeter. Fig. 4 shows a two-range vacuum-tube voltmeter circuit. It may be used to measure alternating-current voltages over a wide frequency range from one-half volt to about 15 volts. The 4.5-volt battery and the 25,000-ohm variable volume control type resistor provides a convenient method of setting the meter to zero. A 60-cycle alternating-current voltage from a filament transformer may be used to calibrate this instrument. Other types of vacuum-tube voltmeters may easily be constructed.[1,2]

100 KC Oscillator and 10 KC Multivibrator. The equipment required for Experiment 30 is shown in Fig. 5. It consists of a 100-kilocycle oscillator followed by a harmonic amplifier, the plate circuit of which contains a resonant circuit L_4, C_9 that may be tuned to amplify any harmonic of the 100-kilocycle oscillator. Output voltage may be secured from this harmonic amplifier up to the 300th harmonic, 30,000 kilocycles, of sufficient power to be useful.

The multivibrator unit shown as a part of Fig. 5 is a resistance-coupled oscillator circuit that may be controlled by the 100-kilocycle oscillator and tuned to exactly 10 kilocycles by varying R_{10}. Output voltage at 10-kilocycle intervals is then available with as good accuracy as that of the 100-kilocycle oscillator. The multivibrator unit may be made inoperative (leaving only the 100-kilocycle oscillator harmonics) by closing switch S in the second tube-grid circuit.

The power supply shown using a VR150 voltage regulator tube will provide constant plate voltage and consequent good frequency stability for the 100-kilocycle oscillator.

[1] *The Radio Amateur's Handbook*, published by the American Radio Relay League, West Hartford, Conn.

[2] *Vacuum Tube Voltmeters*, published by John F. Rider, New York.

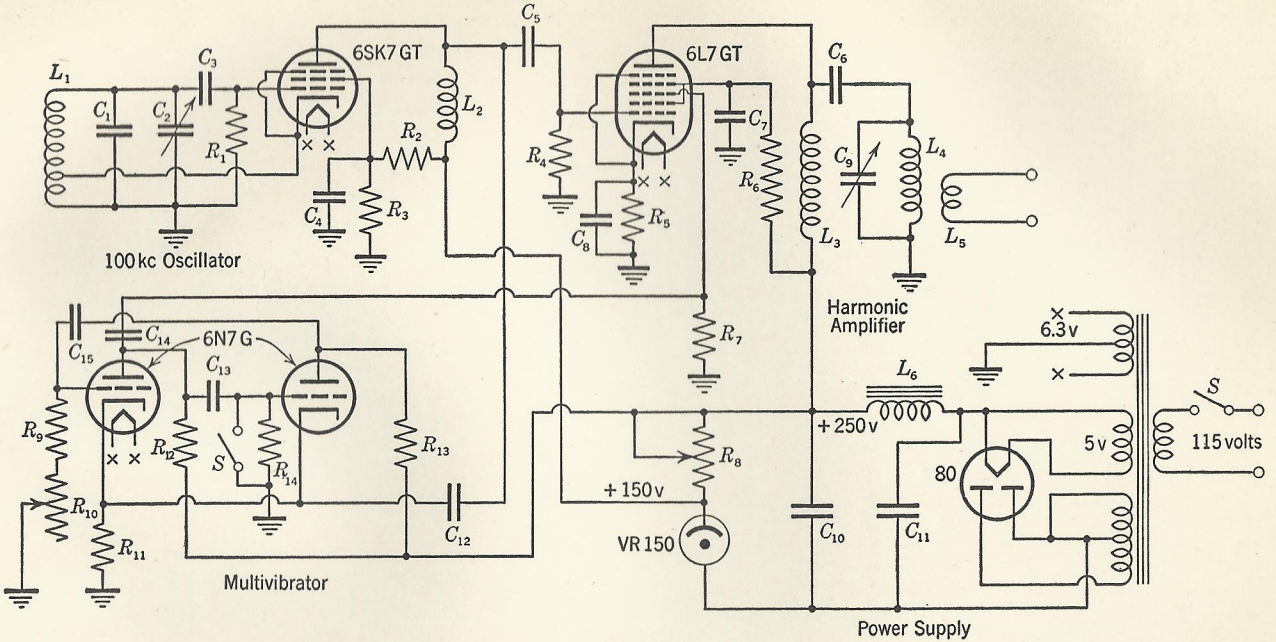

R_1 250,000 ohms	R_6 15,000 ohms	R_{11} 300 ohms	C_1 .0012 mfd	C_8 0.01 mfd
R_2 10,000 ohms	R_7 50,000 ohms	R_{12} 2500 ohms	C_2 .00005 mfd	C_9 .00015 mfd
R_3 50,000 ohms	R_8 5000 ohms	R_{13} 2500 ohms	C_3, C_5 .00025 mfd	C_{10}, C_{11} 8 mfd
R_4 100,000 ohms	R_9 15,000 ohms	R_{14} 30,000 ohms	C_4, C_7 0.1 mfd	
R_5 500 ohms	R_{10} 25,000 ohms		C_6, C_{14}, C_{15}, C_{13} .002 mfd	

FIG. 5. 100 kilocycle oscillator, multivibrator, and harmonic amplifier.

INDEX

Ammeter, 1
  shunt for, 3
  use of, 1
Amplifier, 41
  class A, 55
  class C, 58
  equivalent circuit of, 46
  calculation of gain, 45
  high-frequency response of, 46
  intermediate-frequency, 70
  low-frequency response, 46
  power, 41
  resistance-capacitance coupled, 41
  voltage, 41
Amplification factor, 32
  dynamic measurement of, 34
Attenuation, 50

Bleeder resistor, 39
Bureau of Standards, standard frequency transmissions of, 81

Cable, characteristics of, 50
Capacitance, distributed, 83
  measurement of, 83
Carrier wave, 62
Cathode-ray vacuum tube, deflection of beam, 19
  determination of waveform by, 21
  measurement of frequency by, 22
  measurement of phase by, 22
  measurement of voltage by, 21
Cathode, electrons emitted by, 29
  types of, 29
Coefficient of coupling, K, 27
Condenser, action of, 14
  electrolytic, 39
  padding, 71
Copper-oxide rectifier, use of, 3, 4
Copper-oxide type meter, calibration of, 5
  shunts for, 4
Coupled impedance, 28
Critical coupling, 28
Current, measurement of, 1

D'Arsonval type meter, 2
Decibel, 53
Demodulation, 65
Detector, crystal, 66
  diode, 67
Diode, characteristics of, 30
Direct currents, defined, 2
  measurements of, 2
Distortion, types of, 66

Electrodynamometer, type of meter, 4
Equalizer, 51
Equipment, precautions on use of, 1

Filter, 38

Galvanometer, use of, 10

Hartley oscillator circuit, 42
High-frequency alternating currents, 2
Hot-wire meter, 4

Impedance, calculation of, 16
  of parallel circuit, 17
  of series circuit, 16, 22
  triangle, 16
Inductance, apparent, 84
  effect of, 13
  measurement of, 82
Induction coil, use of, 50
Insufficient coupling, 28
Iron vane meter, 4

Joule's law, 7

Kinescope, 21
Kirchhoff's laws, 7

Lissajous figures, 22

Low-frequency alternating currents, 2
measurements of, 3

Microammeter, 1
Microphones, 53
Milliammeter, use of, 1
Modulation, 60
measurement of, 64
percentage of, 62
Modulator, 61
Multivibrator, 82
Mutual conductance, 34
Mutual inductance, 27

Neutralization, of triode tube, 60

Ohm's law, 7, 14
Operating point, of vacuum tube, 32
Oscillator, beat, 79
Colpitts, 42
construction of, 88
efficiency of, 45
electron coupled type, 42
Hartley, 42
heterodyne, 79
line type, 76
plate power input, 45
tuned plate type, 42

Pads, 52
Parallel resistances, calculation of, 8
Peak voltmeter, 21
Pentode vacuum tube, 36
mutual characteristics of, 36
plate characteristics of, 36
Phase measurement, 22
Plate characteristics, of diode, 31
Plate resistance, 34
Precautions, on use of equipment, 1

Q of a circuit, 23, 26

Ratio arm resistances, use of, 11
Reactance, measurement of, 15
of condenser, 14
of inductance, 13
Rectifier, 37
full wave, 38
gaseous, 47
half wave, 38
Receiver, automatic volume control, 78
communications type, 79
selectivity of, 78
signal strength meter of, 80
tracking of circuits of, 71
Resistance, measurement of, by reactance variation, 72
by resistance variation, 72
by substitution method, 73
by voltmeter-ammeter method, 9
by Wheatstone bridge, 72
Resistance, parallel connection, 8
Resonance, calculation of impedance, 24
frequency of, 23
parallel, 24
series, 22
use of, 22
voltage step-up due to, 23

Sawtoothed oscillations, 47
Screen grid, in vacuum tube, 36
Selectivity, of resonant circuit, 28
Series resistor, for voltmeter, 3
Shunt resistor, for ammeter, 3
Space charge, in vacuum tube, 30
Superheterodyne, 70
Suppressor grid, in vacuum tube, 36
Sweep voltage, 20
Synchronizing control, of oscilloscope, 20

Tank circuit, use of, 60
Telephone, common battery type, 50
magneto, 49
Telephone line, calculation of losses in, 50
Thermocouple ammeter, calibration of, 5
use of, 3, 5
Thermomilliammeter, 5
Timing voltage, 20
Tone control, 47
Transconductance, 34
Transfer characteristic, of vacuum tube, 31
Transmission line, as a resonant circuit, 75
calculation of wavelength, 75
characteristic impedance of, 68, 75, 77
measurement of line current, 76
standing waves on, 75

Triode, amplification factor of, 33, 35
equivalent circuit of, 41
mutual characteristics of, 31
mutual conductance of, 34
plate characteristics of, 31
plate resistance of, 34
transfer characteristics of, 31

Ultra-high-frequency alternating currents, 2

Vacuum-tube voltmeter, characteristics, 85
use of, 6
Voltmeter, series resistor for, 3
use of, 2
Volt-ohm-milliammeter, 4
Volume indicator, 54

Waveform determination, 21
Wavemeter, calibration of, 26